GEOS 24705 ENST 24705 ENSC 21100

Lecture 15 extra

Hydro

Energy in a flow: dam hydro *(recover in pressure term)*

Energy/mass = $\frac{1}{2} v^2$ + $g\,h$ + p/ρ

kinetic gravitational pressure gradient

Power = energy/mass * mass/volume * volume/time

Flow f = mass/time

$$P = \varepsilon \cdot \rho \cdot A \cdot v$$

energy density is pressure term: $\varepsilon = p/\rho$

$$\mathbf{P = p \cdot (A \cdot v)}$$

Energy in a flow: dam hydro *(pot. energy term)*

Energy/mass = $\frac{1}{2} v^2$ + $g\,h$ + p/ρ

kinetic gravitational pressure gradient

Power = energy/mass * mass/volume * volume/time

Flow f = mass/time

$$P = \varepsilon \cdot \rho \cdot A \cdot v$$

energy density is pot. energy term: $\varepsilon = gh$

$$\mathbf{P = g\,h\,\rho \cdot (A \cdot v)}$$

Typical rotor size is evident in photographs

Pelton (1870s)

High head, low flow

Impulse turbine used with dam

Francis (1848)

Medium head, all but highest flows

Pure reaction turbine

Kaplan (1922)

Low head, all flows

Pure reaction turbine

Images: L. Voith Siemens
M. Copyright unknown
R. Photo V.O. Kanninen

Flow differs in three main hydro turbines

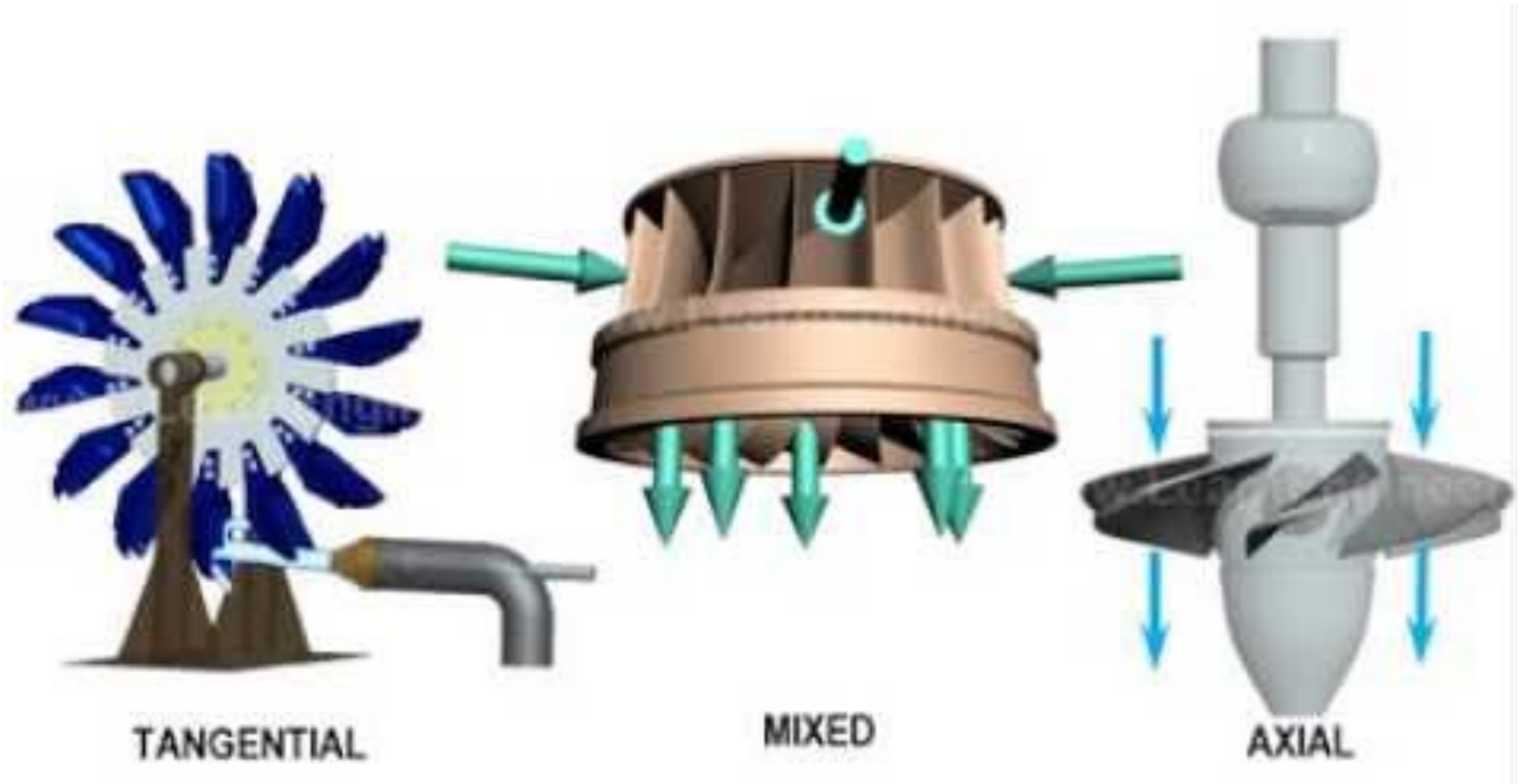

Pelton wheels: ***impulse turbine***

high head (100->1000 m), low flow

but also used for small-scale micro-hydro

Even in micro-hydro use, control fluid pressure and velocity with inlet nozzles rather than putting wheel in river and letting it spin.

Francis turbine: ***reaction turbine***
medium head (10 - 500 m), high flow
Hydro getting bigger…over 800 MW max
Efficiency already near max – but larger scale lowers cost

Francis turbine runner from Three Gorges Dam project, China (700 MW)

Runner is only small part of turbine assembly

Inlet spiral is even larger

Francis turbine intake spiral from Grand Coulee Dam, 1942

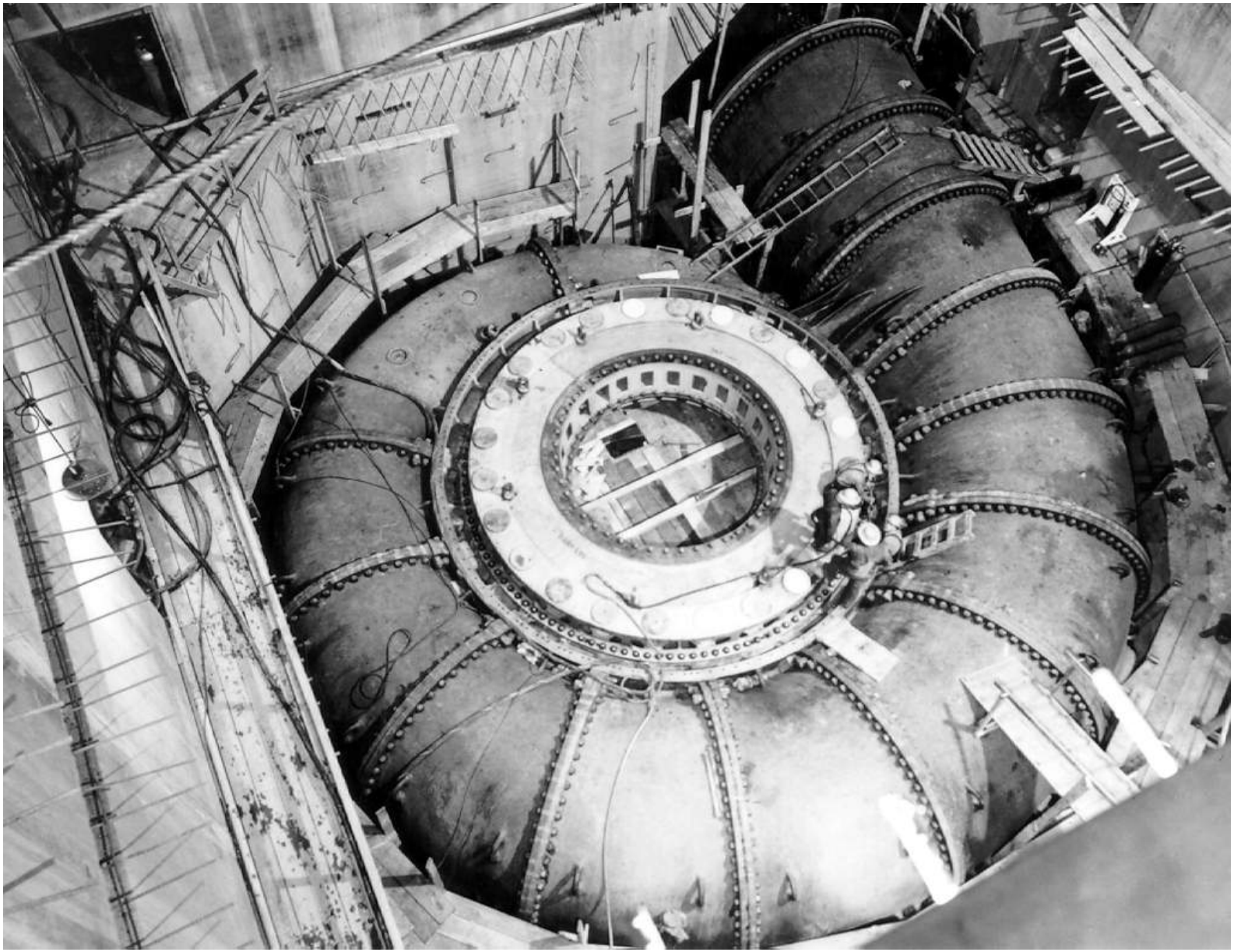

Turbine assembly is runner, input spiral, draft tube

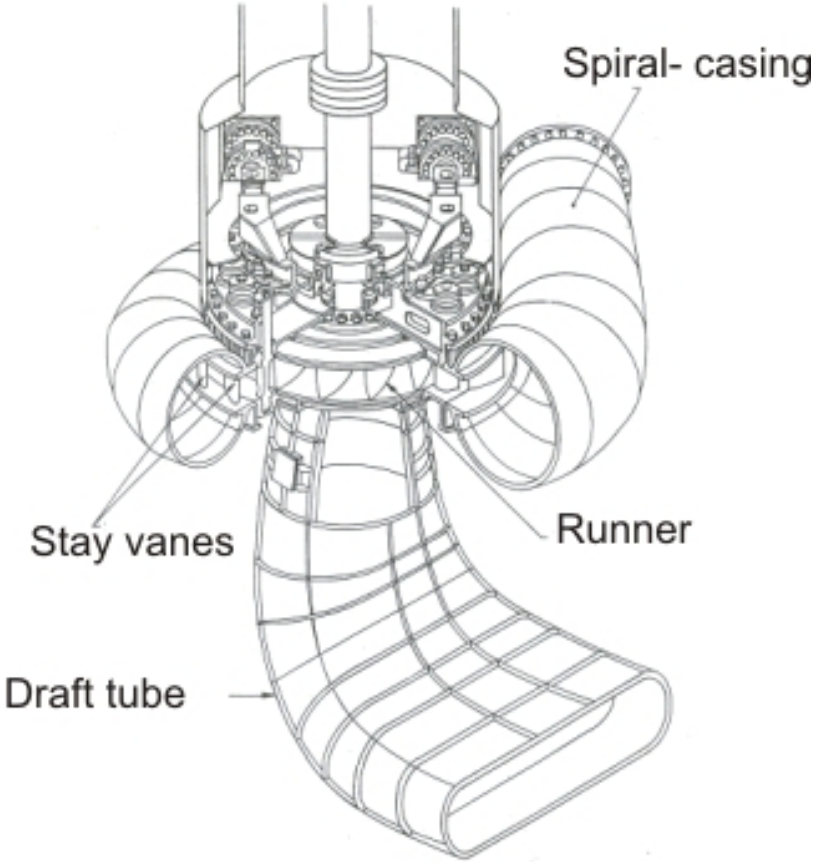

What is the input spiral for? Why does it decrease in radius?

What is the function of the draft tube? Why does it fan outwards?

Turbine assembly is runner, input spiral, draft tube

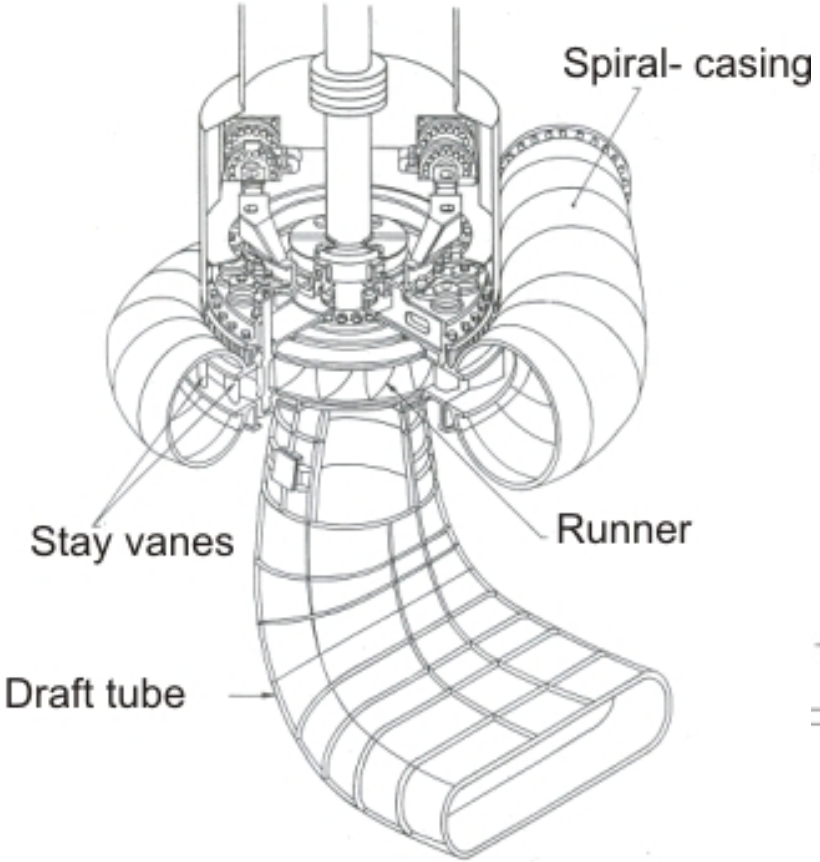

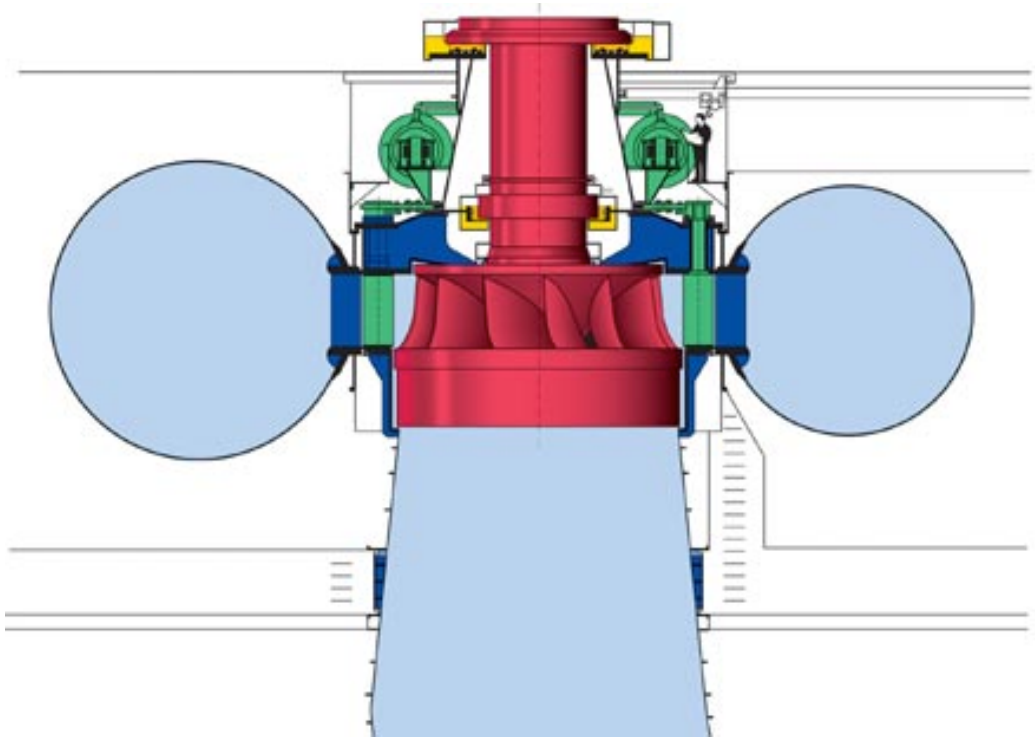

What is the input spiral for? Why does it decrease in radius?

The spiral directs water **radially** to the runner. Because water flows in to center and is lost, the diameter has to narrow to keep velocity constant.

What is the function of the draft tube? Why does it fan outwards?

To produce a slow-down of motion and drop in pressure. (It's an "anti-nozzle")

How fast does the turbine rotate?

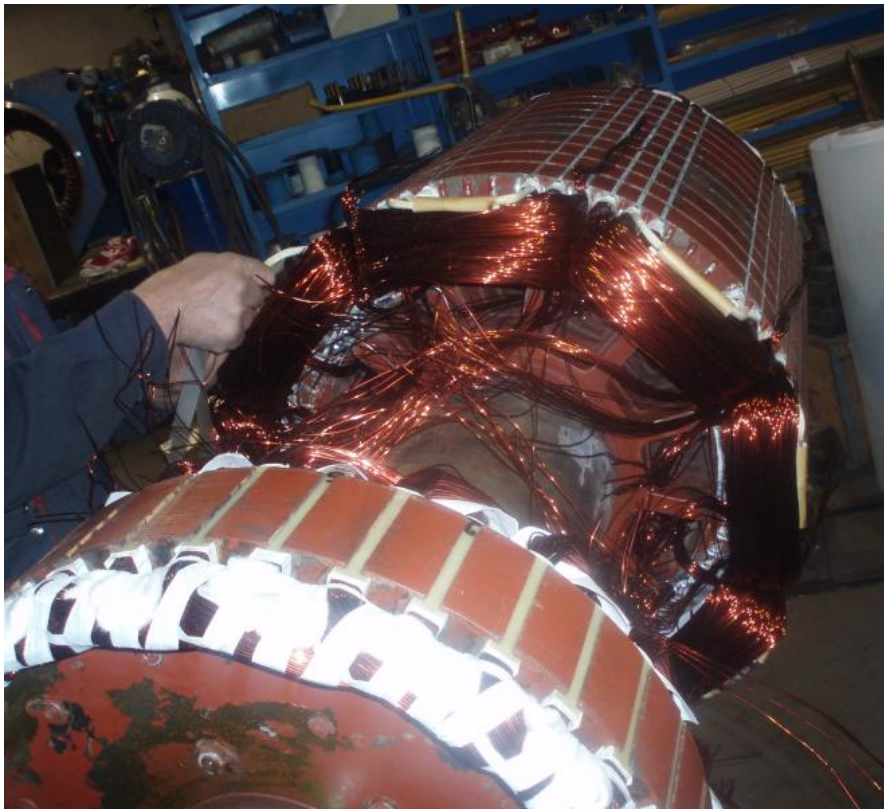

***T**: 15 m rotor for 400 MW generator at Son La hydroelectric facility, Vietnam.*

***R**: Rewinding the rotor electromagnet for a small hydroelectric plant*

Will a hydro turbine rotate as fast as a gas or steam turbine?

No – gas turbines rotate at 60 Hz but hydro turbines rotate more slowly, sometimes ~1 Hz

How does it make 60 Hz AC electricity?

By increasing the number of poles in the rotor magnet *(no gearbox at 800 MW!)*

Pros and cons of dam hydro

Cons

- Environmentally destructive
- Increases evaporation – reduces downstream flow
- Capacity not ultimately great enough to meet all world's energy needs

Pros

- Low maintenance over long life
- ... and zero fuel cost...
- … so is extremely cheap and simple
- CO_2-free
- Infinitely schedulable – fast turn-on
- Provides storage when not needed...
- ...therefore reliable (compared to wind, solar)

Cheapness and reliability make hydro the generation technology of choice of developing countries

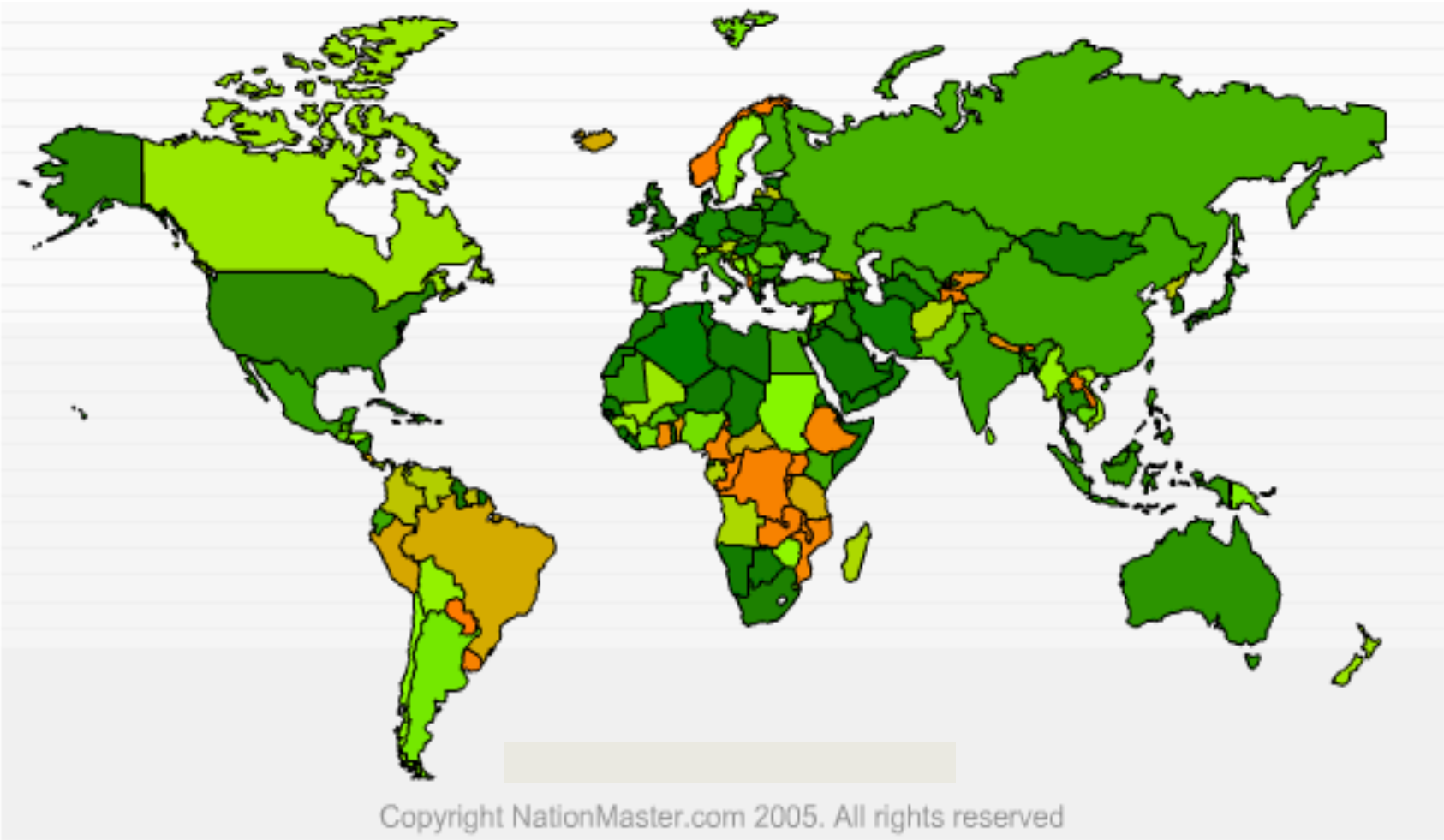

Legend: Top Middle Bottom

100% 26% 0%

Image: Nationmaster.com, 2005

Cheapness and reliability make hydro the generation technology of choice of developing countries

Hydro as fraction of electricity generation:

U.S.	~ 7%
World	~ 15%
18 countries	> 95%

in Africa: Congo Brazzaville, Zambia, Burundi, Uganda, Congo DRC, Rwanda, Ethiopia, Cameroon, Mozambique, Malawi, Ghana

in Asia: Bhutan, Laos, Tajikistan

In Latin America: Paraguay, Uruguay

In Europe: Norway, Albania

Data: Nationmaster. com, 2005

But, rich countries use MORE hydro

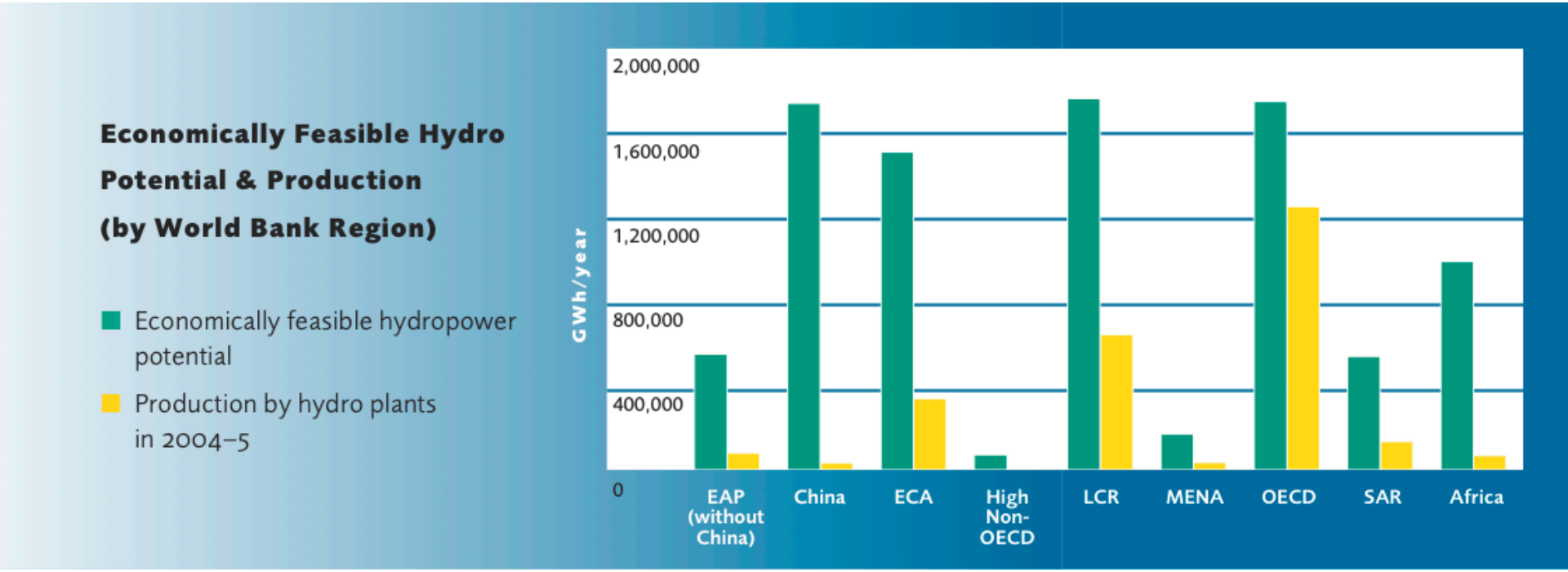

Rich countries actually use more of their hydro potential than developing countries. Hydro ***fraction*** is high for developing countries just because they don't have much else.

Image: "Directions in Hydropower", The World Bank Group, 2009. Figure: based on International Journal on Hydropower and Dams, World Atlas 2006 and various national statistics.

Energy density and turbine/pump efficiency makes hydro a useful form of energy storage

Use electricity to drive pump to water uphill to store energy....

... then release water through a turbine to generate electricity

Uses:

- Storing energy from intermittent sources
- Buy low, sell high: arbitraging electricity prices

Image: source unknown