GE
Energy

Technical Requirements for Wind Generation Interconnection and Integration

Prepared for:

ISO New England

Prepared by:

GE Energy Applications and Systems Engineering

EnerNex Corporation

AWS Truewind

Principal Contributors:

Robert Zavadil
Nicholas Miller
Glenn Van Knowe
John Zack
Richard Piwko
Gary Jordan

November 3, 2009

CONTENTS

FIGURES

Section 1

INTRODUCTION

This report documents current status of wind generation technology and forecasting. It is intended to provide information on important topics related to the interconnection of wind generation facilities to the bulk power system, the operation of the bulk power system with significant amounts of wind generation, and the technology underlying wind generation forecasting and applications to power system operation.

In addition, as requested by ISO-NE, the project team consisting of GE, EnerNex Corporation, and AWS Truewind offers commentary and makes specific recommendations based on their work in the electric power and wind generation industries. It is understood that these recommendations may form some of the basis for ISO-NE policies and practices in anticipation of significant wind generation development in their market footprint. The recommendations (as well as the overall report) focus on the underlying technologies for large-scale wind generation and its interconnection and integration with the bulk power system (BPS). Other issues, such as design of specific energy market mechanisms or financial incentives, are discussed but the details of the architecture and implementation of specific designs are outside the scope of this report.

The report is divided into three major sections:

1. **Wind Turbine and Wind Plant Technology**, which covers aspects of wind plant performance and capabilities relevant to the interconnection with the transmission network and integration with ISO-NE system operations
2. **Wind Generation Forecasting** describes the science and challenge of wind generation forecasting, the commercial state-of-the-art, and prospects for future improvement. Data requirements for forecasting are defined, as well as the latest thinking in how the information generated by a forecasting system should be interfaced with power system operations.
3. **Grid Operations with Significant Wind Generation,** where the fundamental challenges for short-term operational planning and real-time management of systems with substantial wind generation area described, along with mechanisms for minimizing or reducing the technical or economic impacts.

There is some overlap between the background sections. This was intentional, since the three topical areas can be viewed as interconnected. For example, the Wind Generation Forecasting System has critical interfaces with both individual wind plants and the grid operator, who in turn has a direct interface to each individual wind plant. In some cases these interfaces are physical, as in the communications infrastructure used to transmit operating data and control signals. In other cases, the interface involves requirements or specifications, i.e. interconnection

requirements that spell out the necessary behavior of a wind plant at the point of interconnection to the bulk transmission system.

The information contained in the main body of the document, as constituted by the three major sections, form the basis for the **Recommendations** to ISO-NE, which is the initial section of the report.

Section 2
RECOMMENDATIONS

The recommendations of sections 2.1, 2.2, and 2.3 are functionally grouped according to requirements to be placed on individual wind plants, the system for forecasting wind generation, and recommendations for Independent System Operator of New England (ISO-NE operations). These recommendations are supported by detailed discussion in Section 3 , Section 4 and Section 5 , respectively.

2.1. RECOMMENDATIONS FOR WIND PLANTS

Recommendations provided in this section are specifically intended to guide requirements that should be placed on interconnecting wind plants. This is distinct from further recommendations, summarized in Section 2.3 below, that provide recommendations on how ISO-NE should use these functions in the operation of the ISO-NE system. Further detailed technical background on each recommendation is provided in Section 3 .

In general, the project team recommends that wind plants to be connected with the bulk transmission network be treated no differently than any other generator in the ISO-NE interconnection queue. Experience from recent years has shown that wind plants can be designed to meet requirements established for conventional generating units and plants; additionally, the current fleet of commercial turbines enables dynamic performance in response to system disturbances that is possibly more benign than the behavior of conventional synchronous generators.

Taking this line of thinking one step further, ISO-NE interconnection requirements must focus on the plant behavior, and how it interacts with the rest of the power system. While wind turbines are an especially important component of wind plants and their capabilities and behavior will influence the necessary plant design to achieve desired performance, interconnection requirements should avoid inferences to the specific behavior of wind turbines.

Wind plants are not simply collections of individual wind turbines. Rather they must be integrated into fully engineered power plants, with many other critical components. The wind industry has been a rather slow to fully recognize that the capabilities and features of a specific wind turbine are only the starting point for design of the plant. With the progress that has been made in this area over the past few years, the project team feels strongly that specifying the terminal behavior of wind plants consistent with what is required for conventional generating facilities is the proper approach.

Integration encompasses the influence of wind plants on and participation in short-term scheduling and real-time operations of the ISO-NE system. Included are the nature of wind energy delivery in real time and the control thereof, mechanisms for coordination of wind plant

operation with ISO-NE system operators, and the collection and communication of important operational data.

The general recommendation here adheres to the philosophy for interconnection: Requirements for wind plants in terms of visibility and interoperability with ISO-NE should be as consistent with those for conventional generators as possible. However, the unique characteristics of wind energy production necessitate some special considerations in the operating time frame. Recommendations presented here recognize the different characteristics of wind generation, and are intended to provide requirements to be placed on wind plants that will enable ISO-NE to successfully operate with large amounts of wind power considering the unique nature of the resource.

The focus of these recommendations is on the wind plant as a single entity. Recommendations are functional, rather than providing wind turbine technology specific guidelines. Most important, these are forward looking recommendations, based on current understanding of available and merging technology, and on current understanding of the challenges faced by grid operators for integration of large amount of wind generation. The reality is that technology, practice and understanding are evolving rapidly. ISO-NE must recognize that adjustments to rules and requirements will continuously emerge as the entire industry matures.

Recommendations concerning specific requirements follow.

2.1.1. Voltage and Reactive Power Recommendations

2.1.1.1. Comply with FERC and NERC

Both the FERC (Federal Energy Regulatory Commission) and NERC (National Electricity Reliability Corporation) have been actively engaged in setting rules and recommendations for voltage and reactive power control. FERC Order 661a [1] sets requirements for power factor range and for voltage regulation. These rules, while subject to some interpretation, are still a sound foundation for ISO-NE. NERC activities are summarized in section 2.3.6

2.1.1.2. Pursue 0.95 Power Factor at POI

FERC Order 661a sets a requirement for ±0.95 power factor capability at the point of interconnection. There is a qualifying clause that puts the onus on the host system to prove the need for meeting this range. This is at odds with most NERC regional large generator interconnection rules. Nevertheless, per discussion in Section 3.3, some grids (utilities and/or ISOs) have decided that the language is so vague and that the definitions for the burden of proof so ambiguous, that they waive the power factor range requirement. The 0.95 power factor rule roughly translates to a requirement for ±0.90 power factor at the wind turbine generator terminals, as is typical for synchronous generation. ISO-NE's Large Generator Interconnection Agreement (LGIA, Item 9.6.1) requires that power plants be capable of continuous operation in the range of 0.95 power factor leading to 0.95 power factor lagging. The LGIA presently exempts wind plants from this requirement. The project team recommends that this exemption be eliminated for large wind plants. Today's wind plant technology is fully capable of meeting this power factor range requirement, and reactive power support with closed loop voltage control is essential to the operation and reliability of a power grid.

Voltage and reactive power measurements should be made at the specified point-of-interconnection (usually the transmission side of the wind plant substation transformer)..

However, at the same time, ISO-NE should avoid applying the ±0.95 power factor rules for unreasonable conditions. Specifically, as with other generation, the wind generation equipment should not be required to violate voltage ratings. In practice, this means that wind plants ought not be required to deliver large amounts of reactive power into a system with already high voltages, nor consume reactive power from systems with low voltages. As discussed in Section 3.3.1, some grid codes have made provision for this practical constraint.

2.1.1.3. Specify a minimum level of dynamic reactive power capability

Current rules do not address the nature of the reactive power capability necessary to meet minimum power factor requirements. As discussed in Section 3.3.2.2, some systems require that roughly ½ of the total range be dynamic. Such a requirement may prove to be overly restrictive or expensive for the system needs of New England. It is recommended that ISO-NE system studies be used as a mechanism to dictate the fraction of plant reactive capability that must be dynamics. Requirements should be based on dynamic simulations of voltage performance for system disturbances. Voltage recovery times should be consistent with ISO-NE planning criteria.

2.1.1.4. Enforce prescriptive interpretation of the rules

The language around power factor and voltage regulation in the rules has been subject to two general interpretations that can be widely classified as "permissive" and "prescriptive". The permissive interpretation is that wind plants are required to stay within the ±0.95 power factor range, but are allowed to be anywhere within that range. Whereas, the prescriptive interpretation is that wind plants must provide voltage regulation at the specified point (usually, but not always the point-of-interconnection) by delivering the reactive power required to meet a specified voltage (under control of a voltage regulator) anywhere within the required power factor range. As discussed further in Section 3.3, this later interpretation of the rules is more in line with practice for other types of generation and is more consistent with the reliability needs of the grid.

2.1.1.5. Schedule voltages

ISO-NE's LGIA, Item 9.6.2, requires power plants to have a voltage regulator and to operate in automatic voltage control. Wind plants should be subject to this same requirement, and should respond to voltage setpoint (schedule) signals communicated from the ISO to the wind plant. Wind plants are often connected in weak portion of the grid, and selection of appropriate voltage schedule can improve the performance and security of the system. See Section 3.3 and 3.3.2.1 for additional information about voltage regulation.

2.1.1.6. Avoid power factor control

The default design for many wind plants, the FERC rules notwithstanding, is to provide power factor control. Holding unity power factor is relatively common. This practice evolved because wind plants were originally incapable of providing voltage regulation, and it persists in much of Europe. However, power factor control is inimical to good grid performance in large geographically diverse grids with significant wind generation. Further discussion is provided in Section 3.3.

2.1.1.7. Be careful of control of multiple plants

It is not uncommon for multiple wind plants to be developed in relatively close electrical proximity to each other, and electrically remote from large portions of major grids. This certainly could become the case in New England. Voltage control for multiple power plants in close requires some care and coordination. This applies to wind plants as well. Further discussion is provided in Section 3.3.2.3.

2.1.1.8. Adopt permissive rules for low power

Unlike the vast majority of the thermal power plants, wind plants can typically operate at quite low power levels. Per discussion in Section 3.3.2.4, under low active power conditions, it can be difficult for wind plants to meet tight requirements for voltage and reactive power control. Requirements for voltage regulation should be relaxed or eliminated at low power (less than about 20% of plant rating), and permissive reactive power range should enforced. This permissive interpretation means that a plant may operate anywhere in the reactive power range corresponding to ±0.95 power factor of 20% of plant nameplate whenever the plant power output is below 20% of its nameplate rating. For a wind plant rated at 100 MW, this works out to be ±6.6 MVAr for power levels between zero and 20MW.

2.1.1.9. Consider no-wind VArs

Some wind OEMs offer the capability for wind plants, to provide controllable reactive power even when the wind turbines are not running due to low (or high) wind. This capability can be provided either by wind turbine-generator controls (per Section 3.3.2.5) or by means of separate reactive power devices (e.g. static VAr compensators) within the wind plant (per Section 3.3.1). From a grid operations perspective, this is roughly similar to having a conventional generator run as a synchronous condenser, but with lower losses. ISO-NE should recognize that such capability is available, and may be highly valuable in remote or weak portions of the system. The ancillary service market for reactive support in New England may be sufficient to encourage this functionality. If not, contractual arrangements should be made to enable this capability, where attractive, on a case-by-case basis.

2.1.2. Performance During and After System Disturbances

2.1.2.1. Comply with FERC and NERC

Again, both FERC and NERC have been actively engaged in setting rules and recommendations for fault ride-through capability. The debate is most mature and arguments most settled for low or zero voltage ride-through. NERC Standards Project 2007-09: Generator Verification is updating Standard PRC-024: Generator Performance during Frequency and Voltage Excursions which will establish technology-neutral requirements for all generators concerning voltage and frequency events. Requirements for high voltage ride-through are somewhat less mature, with both language and numerical thresholds still being widely debated. The industry appears to be converging on rules like those shown in Figure 11. These should be satisfactory for New England, as the needs of large interconnected grids for such performance are all similar. ISO-NE should stay engaged with the ongoing NERC debates, and provide inputs as necessary.

2.1.2.2. Avoid divergent fault-ride through specifications

New England should not develop fault-ride through specs that are different from the convergence of the national debate. This will unnecessarily add cost to wind projects in New England, and will have a tendency to block some OEMs (original equipment manufacturers) from participation (per discussion in Section 3.2.1).

2.1.2.3. Frequency ride-through as per NPCC rules

Generally wind plants are quite tolerant of frequency excursions (per discussion in Section 3.2.3). Present NPCC (Northeast Power Coordinating Council) rules for off-nominal frequency for all plants ought to be applied to wind plants. NERC is establishing frequency ride through requirements for all generators as part of standard PRC-024.

2.1.2.4. Do not bother with explicit dF/dt requirements

Some small or isolated grids (per Section 3.2.4) have adopted rate of change of frequency tolerance requirements. These are unnecessarily complicated for large grids like New England, and are likely to be proscriptive for some OEMs. Current US grid code debate is largely silent on this topic. ISO-NE should not specify rate of change of frequency requirements for wind plants.

2.1.2.5. Allow, or even encourage, reduced power output for deep voltage events

During deep voltage depressions, it is physically difficult or impossible to maintain active power injection to the grid. While some grid codes (outside the US) have tried to force wind turbines to take extreme measures to continue to inject active power during deep voltage dips, this is neither necessary nor desirable. Rather, grid performance during and immediately following severe disturbances tends to be better if active power injection is depressed and then allowed to recover over several hundred milliseconds in the post-fault time frame. Thus, in addition to allowing active power to drop during voltage depressions, New England should avoid excessively tight or fast post-fault power recovery requirements. Per discussion in Section 3.2.2.1, recovery to within 90% of pre-disturbance power within ½ second is a reasonable target. Again, current US grid code debate is largely silent on this topic.

2.1.2.6. Allow or encourage increase in reactive power for deep voltage events.

In contrast to active power, delivery of reactive power during voltage depressions is beneficial to the grid because it helps to support voltage and limit the geographic extent of voltage depression. Per discussion in Section 3.2.2.2, in broad terms, wind plants should be encouraged to deliver as much reactive current as the equipment allows during voltage depressions.

2.1.2.7. Avoid over prescribing fault performance

Some grid codes have moved towards extremely detailed prescriptions for active and reactive power (or current) control during disturbances. In practice grid faults are violent, non-linear, and usually unbalanced events. Such tight requirements do little to improve overall system reliability and can add substantially to the cost of wind generation equipment. New England should avoid tight active and reactive power control (e.g. do not require that reactive current be held exactly at 1.0 p.u., as has been proposed elsewhere) and avoid any requirements beyond survival and recovery for very deep events (e.g. <20%). Per discussion in Section 3.2.2., specific fault performance rules are not normally imposed on other types of generation.

2.1.2.8. Prohibit islanding

Wind plants are not suited to islanded operation. It should be standard practice for ISO-NE to prohibit islanded operation of wind plants. ISO-NE should require transfer trip of wind plants for which relay and breaker action can result, even briefly, in a wind plant being separated from the grid with other, non-wind plant customers. In this context, "islanded" refers to a small portion of the power grid, with little or no other synchronous generation, being separated by switching action from the larger grid. It does not refer to inter-regional conditions for which (for example) all of New England separates from the Eastern Interconnection. Further discussion is provided in Section 3.2.6.

2.1.2.9. Specify recovery and re-start rules after system and wind disturbances

Wind plants will typically automatically start when wind conditions and grid voltage are available. Following system disturbances, the restart of wind plants once system voltage has been restored is usually desirable. However, as with other generators, some situations may arise for which automatic restart is undesirable. ISO-NE should require that wind plants be able to accept commands from system operators both to start and to not start or delay start until certain conditions (e.g. another plant has started) are met. Thus, the default practice for ISO-NE should be that wind plants are not allowed to restart after system disturbances. ISO-NE may determine, analytically or otherwise, that certain plants should be allowed to restart automatically.

As discussed above, wind plants cannot operate in islanded mode. Therefore, wind generation cannot provide blackstart capability. Wind plants can help support a partially restored grid, but must not be relied upon to provide primary frequency regulation. System restoration plans should recognize these constraints. Constraints of system short circuit strength, as discussed in Section 3.2.6, should be respected during restoration. US industry does not have well established practice regarding system restoration with wind generation. ISO-NE should stay engaged with ongoing industry activities.

Wind generation that stops due to wind conditions, either low winds or due to high wind speed (per discussion in Section 3.2.5.3) should be allowed to automatically restart, unless specific operating conditions are identified that warrant blocking. However, multiple large wind plants in wind-rich regions coming back too rapidly after a cutout event may cause an unacceptable disturbance to grid operations. ISO-NE may need to engage ramp-rate limiters when curtailment events occur to manage the rate of power recovery after the event.

2.1.2.10. Substation and station service design

Wind plants, like other conventional generation on the ISO-NE system, should be designed such that station service and auxiliary systems are not dependent on in-feed from vulnerable alternative circuits such as unrelated distribution lines. Requirements for station service reliability for wind plants should be the same as for other non-black start ISO-NE generation.

2.1.3. Active Power Control Recommendations

2.1.3.1. Engage with FERC and NERC

Unlike the previous two topics, discussions of various types of active power control are only the earliest stages within the US. Thus, ISO-NE should stay engaged with the nascent NERC debates (e.g. project 2007-5 and 2007-12 per Section 2.3.6), and provide inputs as necessary.

2.1.3.2. Require curtailment capability, but avoid requirements for excessively fast response

Wind generation can respond rapidly to instructions to reduce power output or to relax curtailments. In many cases response is faster than convention thermal or hydro generation. However, there have been cases where proposed grid codes have made excessive requirements for speed of step response to a curtailment order. This is technically challenging and should be avoided. As discussed in Section 3.4.1, Δ10%/second for rate of response to a step command to increase or reduce power output is reasonable. This rate of response to step instructions should not be confused with deliberate imposition of ramp rate limits, as discussed next.

Some conventional generation can reach, or even exceed, these rates. Most cannot. The project team is not aware of any NERC standards that specify rate of response to redispatch commands (of which curtailment is a subset) in this time frame. Typically, plants must respond to economic re dispatch within minutes. ISO-NE may wish to consider markets or other incentives to encourage rapid rate of response from all generating resources.

2.1.3.3. Require capability to limit rate of increase of power output

Wind plants should be required have the capability to limit the rate of power increase. This type of up ramp rate control capability has been required in some other systems (per discussion in section 3.4.2). This function should include the ability to be enabled and disabled by instruction from ISO. Plants must be able to accept commands from ISO-NE to enable pre-selected ramp rate limits. Plants should be designed with recognition that ramp rate limits should not be required under all operating conditions. ISO-NE should not require that wind plants limit power decreases due to declines in wind speed, i.e. down ramp rate limits. However, limits on the rate of either increase or decrease in power output due to other reasons, including curtailment commands, shut-down sequences, response to market conditions and other control actions can be reasonably required.

2.1.3.4. Encourage capability to accept AGC signals

Wind plant technology has advanced to a point where it is possible for wind plants to participate in AGC. However, doing so requires a wind plant to continuously spill a portion of the available wind energy in order to have up-range available in power output.

Wind plant participation in AGC may be justifiable in small island systems where imbalances quickly lead to significant changes in system frequency. However, in large interconnected grids like the eastern interconnection, AGC participation would not be justified in the foreseeable future. In the more distant future when total wind penetration levels approach 15% to 20% energy of the entire interconnection, AGC participation would become more important.

It is recommended that ISO-NE encourage wind plants to have AGC capability or provision for future retrofit of AGC functions.

2.1.3.5. Encourage or mandate reduction of active power in response to high frequencies

ISO-NE should encourage wind plants to provide over-frequency droop response of similar character to that of other synchronous machine governors. Capabilities to provide this function are discussed in Section 3.4.4.2.

2.1.3.6. Consider requiring the capability to provide increase of active power for low frequencies

This is the other face of frequency control. Wind plants should not be required to provide governor-like frequency response for low frequency under normal operating conditions. This is consistent with any conventional power plant operating at full throttle output (i.e. valves wide open). However, ISO-NE should consider requiring that wind plant have the capability to provide this response, and then establish rules, and possibly compensation, for when such controls would be enabled. This presumably would be a rare occurrence, as the economic penalty associated with enabling these controls is high, as discussed in Sections 3.4.4 and 3.4.4.3.

2.1.3.7. Consider requiring inertial response in near future

Some OEMs are now offering inertial response for wind turbines. As discussed in Section 3.4.4.4, this is distinct from the previous two items on frequency response, in that inertial response is faster and strictly transient in nature. Consequently, there is not a significant economic penalty associated with the use of this new feature.

Synchronous generators have inherent inertial response. It is not a design requirement. It is simply a consequence of the physical characteristics of the rotating masses connected to a synchronous generator which is in turn connected to an ac transmission network. With the exception of Hydro-Quebec, inertia response characteristics have not been specified in grid codes or interconnection requirements for wind plants. Furthermore, language describing this functionality in technology-neutral terms and subject to the physical reality of wind generation equipment is not presently available. ISO-NE should consider requiring this function in the future as the technology matures and as grid operators and reliability organizations learn more about the need for inertial response characteristics from wind plants.

2.1.4. Harmonics

It is recommended that ISO-NE specifically include the IEEE (Institute of Electrical and Electronics Engineers) Standard 519 in the interconnection requirements, consistent with LGIA Item 9.7.6. In addition, ISO-NE should work to establish guidance for wind project developers and designers regarding background distortion on the network, and whether it must be taken into consideration during plant design.

This guidance should be the same as that provided by ISO-NE regarding harmonic performance for all generation and industrial interconnections, as well as substation modifications (including and especially the addition of shunt capacitor banks to the system). Harmonics are discussed in Section 3.5.

2.1.5. Modeling

2.1.5.1. Follow forthcoming NERC guidance regarding model requirements

NERC, IEEE, WECC (Western Electricity Coordinating Council) and, in the near future, the IEC (International Electrotechnical Commission) are working on standardization of wind plant models. This includes modeling, verification and testing. Since the technology is continuing to evolve, this is necessarily a work in progress. However, in the past few years, a degree of consensus has emerged on suitable modeling. ISO-NE should stay engaged in this process and follow evolving industry practice (see Section 2.3.6). Modeling cooperation is discussed in Section 3.6.1.

2.1.5.2. Use open structure models, when possible

Proprietary models provided under confidentiality agreements by OEMs are problematic for ISOs and utilities that must exchange data. Best practice for evaluation of individual wind plants is to use OEM specific models, when available. Under circumstances where open models are not available, New England should insist that plant data be provided for the new generic open structure models (as discussed in Section 3.6.1). This will allow exchange of databases with wind plants reasonably represented for ISO-wide and region-wide analysis.

2.1.5.3. Always make sure data is up-to-date

No manufacturer has a single model with fixed parameters. Data must be updated and verified for the specifics of the project being analyzed. It is not acceptable to copy and reuse old data for new projects without express reconfirmation by OEM. Further, New England should stay appraised of the ongoing changes and improvements to available models, both OEM specific and generic. Modeling of wind plants, (per discussion in Section 3.6.1) while significantly advanced has not yet fully matured. Changes are inevitable.

2.1.5.4. Short-Circuit Behavior

Model requirements should cover short-circuit behavior; in general, guidance from the turbine vendor will be needed, and should be required as a provision for interconnection. Perfection with short circuit modeling is not possible, so short circuit modeling should be deliberately conservative. Specifically, assumptions and approximations that bias results towards high current should be used for equipment rating. When appropriate, assumptions that bias results towards low current should be used for protection aspects that are dependent on minimum current.

This is a challenging topic and the industry is presently developing understanding, processes and recommendations related to short circuit currents. The IEEE Power Engineering Society task force on Short Circuit Fault Contribution from Wind Generators is addressing this issue. It is recommended that ISO-NE track the progress of that task force and evaluate the results of its work. It is possible that this task force will recommend a practice whereby wind plant owners would provide short circuit current information to transmission owners, grid operators, and others who need such data. Short circuit modeling is discussed further in Section 3.6.3.

2.1.5.5. Avoid Point-on-Wave modeling

Highly detailed, Electro-magnetic transients program (EMTP)-like simulations are extremely difficult to do correctly and require deep knowledge of wind turbine generator electrical

controls. Generally, such models are difficult to obtain and unnecessary for engineering of grid interconnections. In applications that require EMTP-like analysis, (per discussion in Section 3.6.4) individual equipment OEMs should be consulted. Equivalents of wind plants for other types of studies need to be developed on a case-by-case basis. Interaction between wind plants and high power electronics, such as high voltage direct current transmission (HVDC) systems, are not well understood, and should not be done with generic models.

2.1.6. Communications between Wind Plants and ISO-NE Operations

Wind plants typically employ comprehensive data collection system for command and control purposes. These systems link all individual turbines to a common master control and monitoring device, normally located in the substation at the point of interconnection with the power grid. These systems are a critical part of the control and monitoring interface with the local grid operator or ISO.

The project team recommends that the basic requirements for communications and control between the ISO and wind plants be based on existing policy for conventional generators. Communications infrastructure is discussed further in Section 5.4.

2.1.6.1. Wind Plant Operator

Wind plants should be required to have the same level of human operator control and supervision as similar sized conventional power plants, per ISO-NE interconnection agreements. The ISO should have 24/7 access for voice communication with the wind plant operator for the purpose of implementing control orders or dealing with abnormal situations.

It is understood that the wind plant operator may be located remotely from the wind plant, in a facility that monitors and operates multiple wind plants, possibly in multiple operating areas. The point is that ISO-NE should have 24/7 access to a person that has direct and immediate control of the wind plant.

If ISO-NE allows unmanned operation for conventional power plants that have sufficient automated and remote control/monitoring functions, then the same should be applied to wind plants of similar MW ratings.

2.1.6.2. Monitoring signals from wind plant to ISO

The following signals should be sampled at the normal SCADA (system control and data acquisition) update rate.

- Active power (MW)
- Reactive power (MVAr)
- Voltage at point of interconnection

The following wind plant status signals are also recommended, but may be sampled at a slower rate:

- Number of turbines available (or total MW rating of available turbines)
- Number of turbines running and generating power (or total MW rating of turbines on-line and generating power)

- Number of turbines not running due to low wind speed
- Number of turbines not running due to high speed cutout
- Maximum and minimum reactive power capability of plant (for some plants in weak grid locations, it would also be prudent to know how much of the total range is dynamic, as opposed to switched capacitors or reactors)
- Total available wind power (equal to production unless curtailed)
- Average plant wind speed (When wind speeds are high and increasing, operators could anticipate high-speed cutout actions)
- Plant main breaker (binary status)
- Plant in voltage regulation mode (binary status)
- Plant in curtailment (binary status)
- Plant up ramp rate limiter on (binary status)
- Plant down ramp rate limiter on (binary status)
- Plant frequency control function on (binary status)
- Plant auto-restart blocked (on/off)

Additional wind plant monitoring signals that would be required for wind forecasting functions are described in Section 2.2.3.

2.1.6.3. Control signals from ISO to wind plant

The following command signals are recommended from the ISO to wind plants:

- Plant breaker trip command
- Voltage order (kV, setpoint for wind plant voltage regulator)
- Maximum power limit (MW, for curtailment)
- Engage up ramp rate limiter (on/off)
- Engage down ramp rate limiter (on/off)
- Engage frequency control function (on/off)
- Block auto-restart (on/off)

As an alternative approach, predetermined up and down ramp rate setpoints could be programmed into the wind plant controls. Then the ISO would not need to communicate the setpoints, but would still have capability to engage those functions when required.

2.1.6.4. Communication standards

The IEC 61400-25 series of standards should be the basis for wind plant communications and interoperability. It provides a comprehensive specification of wind plant data that may be needed by ISO-NE and its forecasting agent. Application of this standard is not yet widespread in the U.S. wind energy industry. However, there is awareness of the need for such as standard

in both the wind energy and electric power industries. The 2009 Utility Wind Integration Group Forecasting Workshop in Phoenix, AZ provides an appropriate illustration. IEC 61400-25 was shown in applications for wind plant operators and energy management systems (EMS) vendors. Given that the object models encapsulate any plant data that would be required for production forecasting or decision support in power system operations, ISO-NE should consider adoption of this standard and timing for that action.

2.1.7. Distribution Connected Wind Generation

Distribution connected wind generation of rating greater than 100kW and less than 10 MW should be subjected to a reduced set of interconnection requirements. Specifically, for the present time, distributed wind generation is subject to the requirements of IEEE Standard 1547 [15]. Distribution connected wind generation must NOT: ride-through faults, regulate voltage or frequency, ever be islanded, and ever be subjected to reclosure action with turbines running. Distribution connected wind generation should be required to: have power factor control; communicate status (on/off), power production and anemometry; accept shut-down commands from the ISO. There is a NERC Integration of Variable Generation Task Force (IVGTF) effort to reconcile FERC Order 661a and IEEE Standard 1547. Further discussion of issues particular to distribution connected wind generation is provided in Section 3.7

2.2. RECOMMENDATIONS FOR WIND GENERATION FORECASTING

2.2.1. Forecast System Type and Components

2.2.1.1. Centralized (ISO-administered)

The ISO-NE should implement a centralized (ISO-administered) wind power forecasting system. The centralized system is likely to have a lower total cost as well as higher and more uniform quality than forecasts provided for each plant and would allow the ISO to control the availability and utilization of plant data to forecast providers. As with load, effective power production planning requires more accurate forecasts for the aggregate system rather than single plants.

In a centralized system, it is likely that data from all wind generation facilities will be available for use in forecast generation at other facilities. This attribute can occasionally have significant benefit for short-term forecasts since data from an “upstream” facility might be a useful predictor for future variations at a “downstream” facility. The centralized system also provides more opportunity to implement a multi-forecaster ensemble since two or more providers could forecast for all generation facilities.

2.2.1.2. Ramp forecasting

The early warning ramp forecasting system should be viewed as a separate forecasting system. Forecasting techniques optimized to minimize mean absolute error do not do well in forecasting the large, rapid changes in wind speeds that cause the most problematic ramping events. The forecasting system should be designed specifically to forecast and alert operators to the likelihood of ramps events. Therefore, ramp forecasting is best accomplished with a separate methodology and system designed specifically to forecast and alert operators to the likelihood of ramp events.

2.2.1.3. Severe Weather

In addition to the routine and ramp forecast systems, a severe weather warning system that provides operators with information regarding the broader weather situation could be useful, especially with respect to extreme meteorological events that may have a serious impact on wind plant operations.

2.2.1.4. Type of Forecast

Since ISOs typically use only a single predicted power value in routine decision making, deterministic forecasts are likely to be more useful for short-term and day-ahead planning. Because of the nature of extreme events, ramp and severe weather forecasts are better expressed as probabilistic forecasts. Therefore, probabilistic forecasts are recommended for predicting ramps events.

2.2.2. Selection of a Forecast Provider

2.2.2.1. Trial Period

If one provider is to be selected, a one-year trial period of candidate forecasters is recommended. The decision should be based on a high-level of consistent performance across all seasons, weather regimes, and look-ahead time periods for a set of specified metrics.

2.2.2.2. Provider Evaluation

If the ISO feels that it needs assistance in vendor evaluation, it is recommended that a non-commercial organization such as the National Center for Atmospheric Research or National Renewable Energy Laboratory provide advice on conducting the evaluation and selecting forecast providers. If a commercial entity acts as the consultant, then that entity and affiliates should be disqualified from being a wind forecasting vendor.

If no trial forecasting period is used, vendor selection should be based on experience forecasting wind in similar weather regimes and providing forecast services to balancing authorities, as well as capability to customize forecasts for specific ISO applications.

2.2.2.3. Multiple Providers

ISO-NE should consider the use of a two-provider system. The use of two providers ensures a higher level of reliability. With multiple forecast vendors, ISO-NE could select the best performer for a given situation or create an ensemble of forecasts based on the time period or forecast situation. The final product could be either the single best forecast or a weighting of individual forecasts.

Although more than two providers might improve the quality of the forecasts, a cost-benefit study would be needed to determine if the added value justifies the additional costs. In order to take maximum advantage of multiple providers, ISO-NE would need to track and compare vendor performance. At a minimum, the evaluation should include vendor performance over various forecast time periods and months to identify specific trends.

2.2.2.4. Forecast Methods

The selected forecast provider should demonstrate an effective use of appropriate methods for different time periods of routine forecasts. There is no single methodology designed to meet the

challenges associated with different look-ahead periods. The recommendation is to leverage the strengths of physical, statistical, and ensemble methods. For example, persistence-regression techniques are most applicable for very short-term forecasts whereas model-based methods are more suitable for periods beyond six hours. Also different methods and types of information should be delivered for ramp forecasts based upon the look-ahead time period.

It is recommended that ensembles be used and constructed in such a manner that the major sources of uncertainty in the forecasts are captured in the modeling system. The major source of uncertainty will vary from location to location and season to season. For example, the source of uncertainty from large scale systems such as fronts is much higher in New England than it would be in southern California.

Similarly, the source of uncertainty from large scale systems would be greater in winter than in summer, even in New England. The forecasts made from the ensembles and provided to the ISO can be either deterministic (made from a weighted average of the ensemble members) or probabilistic with associated uncertainty limits or both can be provided depending on the needs of the ISO.

2.2.2.5. Offshore Forecasting

The selected forecast provider should demonstrate knowledge of marine boundary layers and an ability to forecast their aspects for offshore wind plants. The provider also needs to demonstrate capability to forecast deep and shallow ocean waves. In the cold season, it is a fairly common occurrence to have high waves that would curtail maintenance operations for many days and impact turbine availability for power production. The data requirements for offshore plants would be identical to those for onshore plants with the exception of the need for wave height information.

2.2.3. Forecast Performance Evaluation Issues

2.2.3.1. Methods and Metrics

The recommendation is to evaluate forecast performance for all types of forecasts provided. The most significant issue when setting up the forecast evaluation system is determining which parameter(s) should be used as the metric(s) for forecast performance. The choice of metrics can have a significant impact on the interpretation of forecast performance. Candidate forecast providers should be informed of key metrics and the duration of the forecast evaluation period prior to submitting a proposal. At a minimum, bias, mean absolute error, and root mean square error should be provided for deterministic forecasts. For probabilistic forecasts of ramping events, both missed ramps and false alarms should be tracked as well as the actual frequency of the events that occurred during the forecasting period. When interpreting the results of any forecast evaluation, it is very important to note that forecast performance varies significantly according to the size and diversity of wind plants.

2.2.3.2. Data Requirements

In order to provide the most accurate power production forecast, it is essential that both power production and meteorological data be made available to the forecast providers. It is recommended that wind project owners/operators be meaningfully incentivized to provide high

quality data in a timely manner through a secure communication system for use in wind energy forecast production.

Some providers advocate that forecasts can be made successfully with only power generation data. However, experience shows that although these data are extremely valuable, meteorological observations provide significant added value as well. Thus, the recommendation is to include meteorological observations whenever possible.

2.2.3.3. Production Data

The total aggregate plant power production data and plant availability should be sent to the forecast providers for each forecast interval. A minimum frequency should equal the forecast frequency but a desired value would be the nearest integer factor of one half the forecast frequency. The forecast provider should also have knowledge of any non-meteorological factors affecting the power output of the plant such as plant curtailment. Production data should include the following:

Specifications:

- Nameplate capacity
- Turbine model
- Number of turbines
- Turbine hub height
- Coordinates and elevation of individual turbines and met structures (towers or masts)

Operating Conditions:

- Wind plant status and future availability factor
- Number or percentage of turbines on-line
- Plant curtailment status
- Average plant power or total energy produced for the specified time intervals
- Average plant wind speed as measured by nacelle-mounted anemometers
- Average plant wind direction as measured by nacelle-mounted wind vanes or by turbine yaw orientation

The total aggregate plant power production data and plant availability should be sent to the forecast providers for each forecast interval (e.g. hourly).

2.2.3.4. Meteorological Data

Meteorological data should be provided from at least one met tower that is strategically placed so it will not be impacted by plant operations. The met tower should be at turbine hub height or at least within 20 m of hub height. In general, the met structures should be located at well-exposed sites generally upwind of the plant and no closer than two rotor diameters from the nearest wind turbine. As a rough guideline, each turbine in the wind plant should be within 5 km of a met structure.

Meteorological data should include the following.

Meteorological Structure (Tower or Mast) Specifications:

- Dimensions (height, width, depth)

- Type (lattice, tubular, other)
- Sensor makes and models
- Sensor levels (heights above ground) and azimuth orientation of sensor mounting arms
- Coordinates and base elevation (above mean sea level)

Meteorological Conditions:

Data parameters required at two or more levels:

Average (scalar) wind speed (m/s +/-1 m/s)

Peak wind speed (one-, two-, or three-second duration) over measurement interval

Average (vector) wind direction (degrees from True North +/- 5 degrees)

Data parameter required at one or more levels:

Air temperature (°C +/1 °C)

Air pressure (HPa +/- 60 Pa)

Relative humidity (%) or other atmospheric moisture parameter

Wind measurements on the met structure should be taken at two or more levels, with the levels at least 20 m apart. One level should be at hub height. If this level is not feasible, the closest level must be within 20 m of hub height. To improve data quality and reliability, sensor redundancy for wind speed measurement at two levels should be practiced. The redundant wind speed sensor at each applicable level should be mounted at a height within one meter of the primary speed sensor. It is also recommended that at least one of the wind speed sensors nearest the hub-height level be heated to prevent ice accumulation from affecting the accuracy of wind speed measurements.

The met condition data should be provided at intervals that are equal to or less than the intervals for which the power production forecast is desired. For example, if short-term power production forecasts are desired in 15-minute intervals, then meteorological condition data should be provided at intervals of 15 minutes or less. As with the production data, if the met data cannot be provided in real time, it is still valuable and should be provided for verification and model training.

In addition to data from the met structure, wind speed and direction data (as well as temperature and pressure if available) from nacelle-mounted instruments should be provided from a representative selection of turbines. Each turbine should be within 75 m in elevation and five average turbine spacings of a turbine designated to provide nacelle data.

For large geographical areas, typically more than one observation location would be recommended. However, it is challenging to give exact spacing criteria as these depend on factors such as local weather regimes, terrain complexity, and availability of nacelle data. If nacelle data are provided, fewer met towers would be needed and only one may be sufficient. Thus, the recommended number and location of met towers should be based on weather regimes, terrain complexity, and availability of nacelle data.

2.2.4. Operator Considerations

2.2.4.1. Control Room Integration

The wind power forecasting system products should be fully integrated into the ISO control room. In order to maximize grid management efficiency, it is recommended that an operator be

dedicated to monitoring all of the renewable (variable) power generation resources. It is also suggested that pooling of wind plants into clusters may make it easier for an optimized integration of wind power. The plant cluster is an aggregate of plants grouped together logically (i.e. experiencing similar wind patterns and performance metrics). This approach would have particular value if there were transmission congestion in an area that required curtailment when a specific aggregate of plants exceeded threshold output.

2.2.4.2. Education and Training

An aggressive training program for all users of the forecasts should be implemented as part of the forecast implementation process. Training topics could address a number of areas such as interpreting error characteristics for deterministic versus probabilistic forecasts of ramps and/or other events. The training should cover the overall forecasting process and a high level review of physical versus statistical models as well as the use of observational data for validation and correcting model biases.

2.2.4.3. Provider/User Communication

An effective mechanism for communication between the forecast providers and users should be established. This exchange should include at least yearly workshops attended by forecast providers and users to address forecast performance and usability issues.

2.3. RECOMMENDATIONS FOR GRID OPERATIONS WITH WIND GENERATION

2.3.1. Applying Results from Wind Integration Studies

The wind integration study currently underway (as of September, 2009) at ISO-NE should provide much more detailed understanding and quantification of the operating challenge with significant amounts of wind generation.

As described in Section 3 modern wind plants can be equipped with a variety of features for modulating production of wind energy. Many of these have been demonstrated in actual plants or prototype installations. However, exploiting many of these features involves spilling wind energy, so questions as to their use and requirement necessarily involve economic evaluation.

The production simulation component of the wind integration study provides a means for assessing the cost of various characteristics of wind energy production as well as the value of measures for mitigation for the wind generation scenarios being studied.

2.3.1.1. Curtailment Policies

As wind generation penetrations grow, selective use of curtailment can be appropriate and economically justified under some operating conditions. ISO-NE should use the results of the current integration studies, along with periodic studies of a similar nature going forward, to develop a basis for its curtailment policy.

The study results need to establish the probability, frequency, duration, and value of curtailment as a mitigation measure for operational problems. Absent such quantification, it is very difficult to justify curtailment as general mitigation strategy because of the uncertainty it can pose to wind project developers and financing.

2.3.1.2. Enabling Ramp Rate Controls

Limiting large increases in production, such as at plant startup under high wind conditions, is an appropriate practice and one that is feasible with the wind generation technology of today. ISO-NE should conduct studies to determine the need for and value of such controls, and adopt them if shown to be of adequate value.

2.3.1.3. Enabling Under-frequency controls

Advanced wind plant control that temporarily increases output in response to a sudden decline in system frequency is a potentially valuable capability as the penetration of wind generation grows. ISO-NE should consider market mechanisms that would encourage this function.

2.3.1.4. Use of AGC and dispatch to wind plants

The ability of advanced wind plants to respond to AGC and dispatch signals much like conventional plants has been demonstrated in field testing by multiple turbine vendors. Above, it is recommended that new wind plants be provided with the capability to accept AGC signals.

In some circumstances, such as island or isolated systems or minimum load conditions at high wind penetration, these capabilities may be crucial for integration.

In larger power pools, however, this is seldom the case. The value of these capabilities must be compared to the cost of the spilled wind energy. The current integration study can help to frame the probable value of such capabilities for the scenarios being studied. In general, the economics will dictate whether such performance is practical. It is not recommended that ISO-NE plan to use such capability until (and if) detailed analysis and operational experience is gained.

2.3.1.5. Start-up and Shut Down

Upon starting a wind plant under normal conditions, wind plant production should be brought up slowly per pre-defined ramp rate limits. Shutdown should be accomplished in a similar manner when possible – i.e. not due to dying winds or high-speed cutouts. ISO-NE should adopt permissive restart of wind plants following shut-down due to grid disturbances using the same policies presently applied to other conventional generation in the footprint.

2.3.2. Wind Plant Scheduling and Congestion

The availability of individual wind turbines is quite high. Because of the large number of small generators however, turbine maintenance within wind plants is an ongoing activity. Shutdown of the entire facility would only be done for maintenance of common facilities such as the facility interconnection transformer, and then during low winds. So while wind plant maintenance scheduling differs from that for conventional plants, it is important for turbine availability to be considered in the development of production forecasts. Consequently, turbine availability – defined as the number of turbines currently or forecast to be in service – is a critical parameter that must be passed from each individual wind plant to the forecasting agent.

The physical capability of the each wind plant – i.e. the maximum generation that would be possible given the number of turbines in service – should also be communicated directly to ISO-NE. With transmission congestion, it is possible that production of individual wind plants will

need to be curtailed. The plant physical capability along with meteorological data from the plant would provide a means for calculating the total curtailed energy.

Information on transmission congestion and curtailment must also be provided by ISO-NE to the forecasting agent so that congestion constraints are reflected in the forecasts for the affected plants.

2.3.3. Communications Infrastructure for Managing Wind Generation

Wind plants must provide to ISO-NE all relevant information required of conventional power plants. Other information unique to the wind generation facilities, as identified in other parts of this document, is also required.

The IEC 61400-25 series of standards defines a comprehensive basis for the monitoring and control of wind power plants, including definition of wind plant specific information, mechanisms for information exchange, and mapping to communication protocols, and is compliant with ICCP.

The standard is relatively new, and has not yet been adopted by U.S. ISOs or RTOs. However, it is recommended that ISO-NE strongly consider adopting this standard as a requirement for wind plants, or at a minimum, wind plant control centers.

Adoption would greatly facilitate the later development of tools and algorithms for integration that cannot be anticipated at this time. In addition, such a requirement for distribution system connected turbines would provide the capability for ISO-NE to directly interrogate these installations for support of forecasting or other operational applications.

2.3.4. Operations with Distribution Connected Wind Generation

Information about distributed generation is almost by definition fairly well hidden from system operators. Studies should be conducted to determine the threshold at which distributed generation in the ISO-NE footprint or a specific region could pose some risks for the bulk system. These studies would consider the loss of distributed generation due to transmission system faults and the levels at which ignoring distributed generation production forecasts would begin to affect load forecast accuracy, among other issues.

As the penetration of distributed generation grows, additional application tools and decision support mechanisms for operators to accurately portray potential impacts on the bulk system and the range of mitigation measures available.

2.3.5. Best Practice for Determination of Wind Generation and Wind Plant Capacity Value

The project team feels that capacity valuation methods that use adequate records of historical energy deliveries are most appropriate in the long run. At the same time, it is recognized that methods based on the more rigorous LOLE analysis are superior for evaluating the full spectrum of risks to system reliability from the perspective of resource adequacy, and should also play a role.

2.3.5.1. Recommended Method for Aggregate Wind Generation Capacity Valuation

It is recommended that ISO-NE adopt a method based on **Effective Load-Carrying Capability** (ELCC) for determining the aggregate capacity value of all wind generation facilities in the market footprint.

The evaluation would be conducted periodically. . The LOLE-based method described in Section 5.6.2 should be used, where wind generation is treated as an hourly load modifier, and ELCC is determined by comparison of the "with" and "without" wind cases.

Hourly historical production data should be used to represent existing wind plants. For queue projects, submitted wind speed data or corresponding production data from ISO-NE's adaptation of the NREL mesoscale database for the Eastern Interconnection could be used.

Previous studies have shown a significant variation between annual ELCC results. It is recommended that ELCC results be based on the average of multiple years of historical or simulated data. Initially, a shorter period will have to suffice, unless the mesoscale database is extended. A period of 10 years can be considered a reasonable historical sample.

An advantage of this approach is that the annual assessment will automatically take into consideration the penetration of wind generation in the market footprint. This is important since previous studies have shown that the capacity value of wind generation can decline as the penetration increases. With annual updates, this will be an inherent part of the process.

2.3.5.2. Allocating Aggregate Capacity to Individual Plants

The total capacity contribution determined from the ELCC analysis can be allocated to eligible individual wind generation facilities based on historical production during periods of system stress as defined by ISO-NE.

2.3.6. NERC Activities

NERC will be taking the issue of capacity valuation for renewable and variable resources up in Phase II of the Integrating Variable Generation Task Force. Responsibility for this issue has been assigned to the Resource Issues Subcommittee among others. The IVGTF will also play a role in developing baseline material and making recommendations to relevant committees. ISO-NE should actively participate in these activities, and adapt policies to align with forthcoming NERC recommendations if appropriate.

NERC is constantly updating standards and a number of NERC standards are of specific interest to wind. ISO-NE should actively participate in NERC standards development activities. Specific NERC Standards Projects with implications for wind power include:

- Project 2007-05 – Balancing Authority Controls (potential requirement for all generators to be equipped with AGC)
- Project 2007-09 – Generator Verification (addressing voltage and frequency ride through, exciter [voltage/reactive control] model validation, governor model validation)
- Project 2007-11 – Disturbance Monitoring (possible requirement to monitor each generator breaker)

- Project 2007-12 – Frequency Response (initially collecting data but eventually possibly addressing inertia)
- Project 2008-01 – Voltage and Reactive Control (may address generator status reporting requirements)
- Project 2009-05 – Resource Adequacy Assessment (defining metrics for assessing capacity value)

Section 3

WIND TURBINE AND WIND PLANT TECHNOLOGY

Grid integration of wind power plants is complicated by a number of issues, primarily related to wind variability and uncertainty and the electrical characteristics of wind generators. A typical wind plant appears to the grid as a substantially different generation source than a conventional power plant. The most significant difference is that the wind energy source is inherently uncontrollable. Also, the electrical characteristics of induction, doubly-fed, and full-conversion wind generators have disturbance responses and reactive output characteristics that naturally differ from that of conventional synchronous generators.

Historically, wind plants were allowed to produce real power that varied with the available wind, and was not scheduled in any fashion. Further, like some other generating resources (e.g. nuclear power plants, run-of-river-hydro, combined heat and power plants) wind plants were not required to participate in system frequency regulation, voltage regulation, or control of tie-line interchange.

Such uncontrolled real power output variations can have an impact on the grid, including voltage variations, frequency variations and increased regulation or ramping requirements on conventional generation resources. These are particularly significant issues in weak system applications, island (isolated) systems or in control areas where tie-line interchange is constrained.

In addition, a wind plant in which power output is not controlled inherently cannot participate in regulation of tie-line flows or grid frequency. When wind generation displaces conventional generation, the burden of balancing and frequency regulation placed upon the remaining conventional generators is increased.

Historically, wind plants were also allowed to absorb reactive power from grids, or at best, maintain a prescribed power factor. This is a substantially different operating mode than is required of conventional power plants, which generally regulate their grid interconnection bus voltages. Without coordinated control of wind plant reactive power interchange with the grid, a typical wind plant provides no support or regulation of grid voltage. Furthermore, voltage variations caused by real power variations, as discussed above, cannot be mitigated.

With low penetrations of wind generation, these equipment characteristics and integration approaches did not have significant practical impact. However, wind generation is now reaching substantial penetration levels in many regions, and grid integration has emerged as a potential limit on further development of this environmentally friendly resource. Consequently, interconnecting utilities and regulatory agencies are imposing grid codes that demand performance from wind plants similar to that provided by conventional power plants, i.e., those using steam, gas, and hydro turbines with synchronous generators [1, 2].

In this section, characteristics and capability of modern wind generation, relevant to grid performance, will be examined.

3.1. BASIC TYPES OF WIND TURBINE-GENERATORS (INDIVIDUAL WIND TURBINES)

Wind turbine generator designs vary dramatically from OEM to OEM, and between product lines within OEMs. The industry has begun to group different designs into four groups, described in the following subsections. This grouping is useful to help capture the broad range of performance characteristics that fundamentally affected by basic electrical designs. However, it should be understood that even within the 'types' presented below, there are large differences in capability and performance. These types cover the vast majority of utility scale wind generation, but not all wind generation falls into these categories.

3.1.1. Type 1: Fixed speed Induction Generator

The simplest form of wind turbine-generator (WTG) in common use is comprised of an induction generator with stator circuit connected directly to the grid that is driven through a gearbox, as shown in Figure 1. This type operates within a very narrow speed range dictated by the speed-torque characteristic of the induction generator, as illustrated in Figure 2. As wind speed varies up and down, the electrical power output also varies up and down per the speed-torque characteristic of the induction generator.

In its simplest form, this type of WTG does not include a pitch control system. The blades have a fixed pitch and are aerodynamically designed to stall (i.e., naturally limit their maximum speed). These are called "stall-regulated" turbines. However, more advanced models include a variable blade pitch control system. The stall regulation feature may be implemented passively (blades stall naturally at wind speeds above a certain magnitude) or actively with action by the blade pitch control system.

If the wind speed increases to a level where steady-state electrical power output would exceed the rated power output of the turbine generator, the pitch-angle of the rotor blades is adjusted to limit power output to the rated value. However, the pitch control system is not fast enough to respond to fast wind gusts. If the wind increases rapidly, the electric power output would temporarily increase above rated power (per the torque-speed characteristic), until the pitch control adjusts the blade pitch angle and reduces power output to the rated value.

One advantage of this type of fixed-speed induction generator WTG is its simplicity. A disadvantage is the significant variation in real and reactive power output as wind speed changes. Simple induction generators always consume reactive power, "under-excited" in the convention of grid connected synchronous generators, with the reactive consumption being primarily dependent on the active power production. Thus, management of reactive power must consider this under-excited behavior as well as the reactive power requirements of the grid.

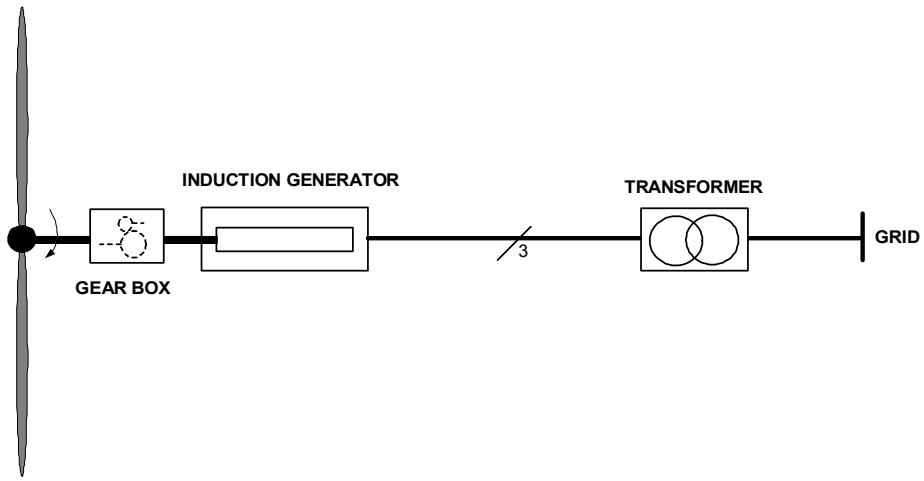

Figure 1: Type 1 WTG; Induction Generator (NEG-Micon, Bonus, traditional Nordex, typical small/residential WTGs)

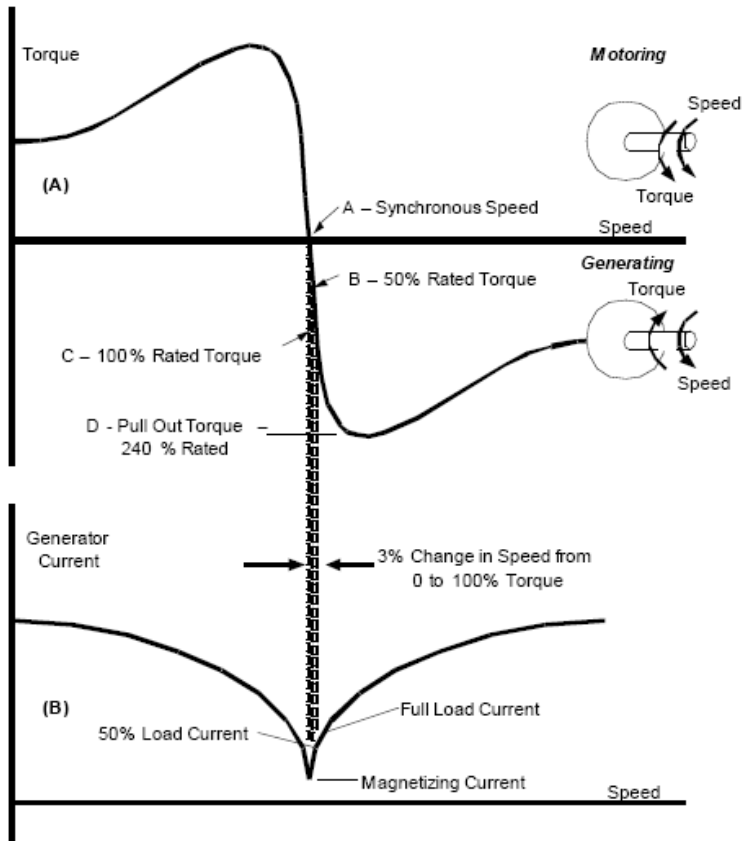

Figure 2: Speed-torque and speed-current characteristics for induction generator. (Source: BEW report for CEC, May 2006)

Figure 3 shows the reactive power at the terminals of a typical induction generator WTG as a function of real power output. The blue trace shows the reactive power consumed by the induction generator. It ranges from about 0.18 pu at no load to nearly 0.50 pu at full load. It is

common practice to compensate for the reactive power consumption of the induction generator by installing capacitors at the WTG. One approach is to compensate for the no-load reactive power consumption with a fixed capacitor, as shown by the gray curve. Another approach is to use several capacitors and switch them as a function of load. This type of "step compensation" keeps the net reactive power of the WTG near zero or some other desired value.

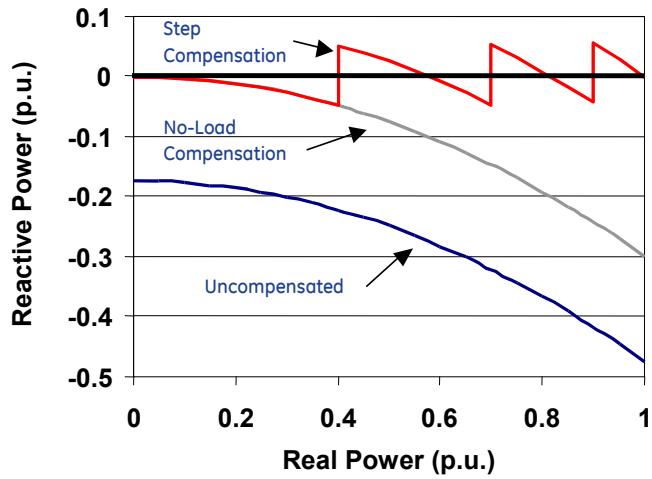

Figure 3: Reactive Power as a function of Real Power for and Induction Generator WTG, with and without compensation using shunt capacitors.

3.1.2. Type 2: Variable-Slip Induction Generator

The variable-slip induction generator WTG is similar to the Type 1 induction generator machine, except that the generator includes a wound rotor and a mechanism to quickly control the current in the rotor by adjusting the apparent resistance of the rotor circuit (see Figure 4). The operating characteristics are similar to the Type 1 induction generator WTG, except that the rotor-current control scheme enables a degree of fast torque control, which improves the response to fast dynamic events and can damp torque oscillations within the drive train.

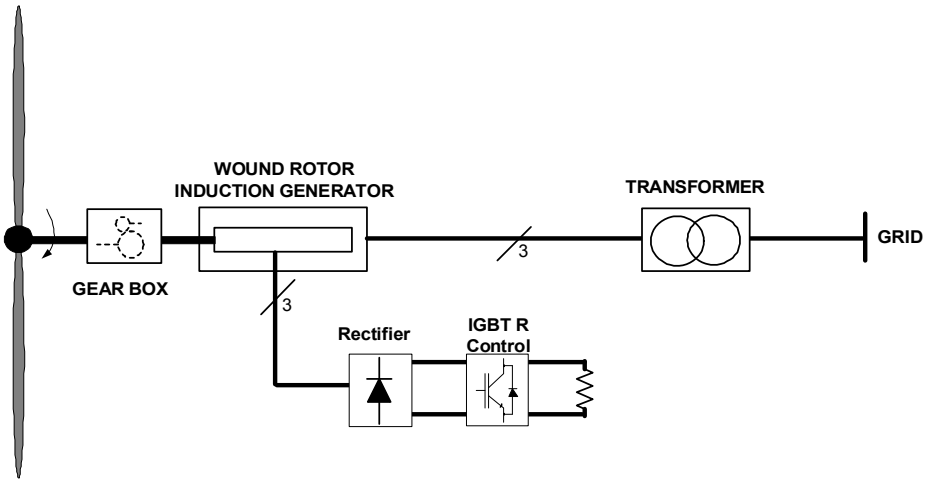

Figure 4: Type 2 WTG; Wound Rotor Induction Generator with Variable Slip (Vestas Opti-Slip®)

3.1.3. Type 3: Double-Fed Asynchronous Generator

The double-fed asynchronous generator (DFAG) type of WTG includes a mechanism that produces a variable-frequency current in the rotor circuit (see Figure 5). This enables the WTG to operate at a variable speed (typically about 2:1 range from max to min speed), which improves the energy capture efficiency and controllability of the WTG. Since the power converters need only be rated to carry a fraction of the total WTG power output, this design is also attractive from an economic perspective.

Although the original incentive for this scheme was variable speed power conversion, the power converters have since evolved to perform reactive power and voltage control functions, similar to those in conventional thermal and hydro power plants. The fast response of the converters also enables dynamic features such as low-voltage ride-through and governor-type functions.

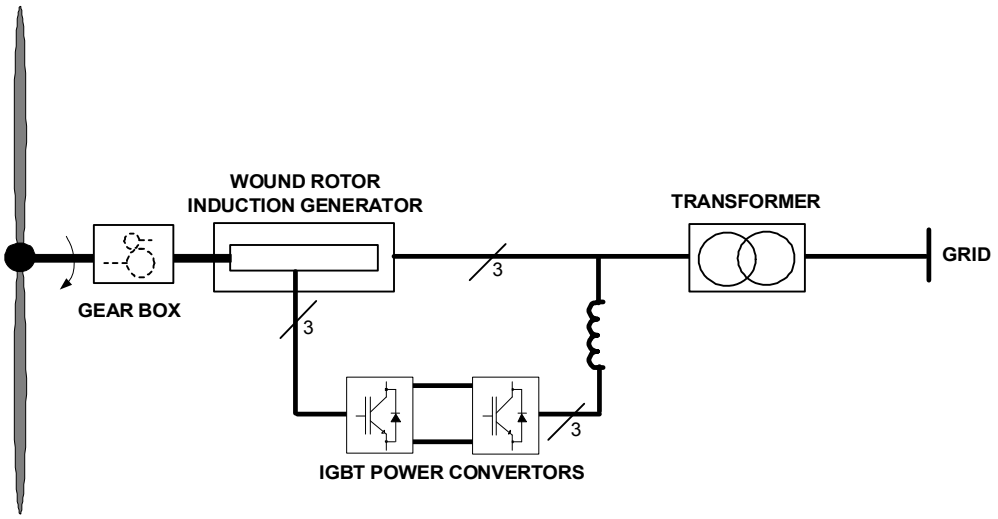

Figure 5: Type 3; Double-Fed Asynchronous Generator, Variable Speed WTG (GE 1.5, RePower, Suzlon, Vestas V80,V90,others)

3.1.4. Type 4: Full Power Conversion variable speed

Another approach to variable speed WTGs is to pass all turbine power through an ac-dc-ac power electronic converter system (see Figure 6). This system has many similar operating characteristics to the DFAG system, including variable speed, reactive power and voltage control, and fast control of power output. It has an additional advantage of totally decoupling the turbine-generator drive train from the electric power grid, which means that dynamics during grid disturbances can be better controlled (LVRT, governor-type functions, etc.). It also reduces dynamic stresses on drive train components when grid disturbances occur.

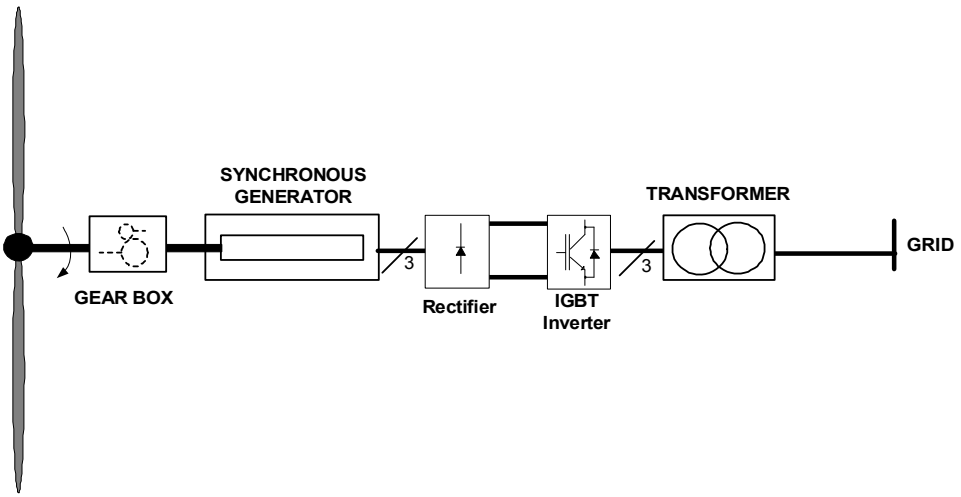

Figure 6: Type 4; Full Power Conversion, Variable Speed WTG (Enercon, Siemens, GE 2.5)

3.2. DISTURBANCE TOLERANCE AND RESPONSE

Wind plants, like all generation, are subject to disturbances in the power system. The response of WTGs to large perturbations in voltage and frequency has been a significant concern in the industry. Different aspects of disturbances, and the ability of WTGs to tolerate them, are described in this section.

3.2.1. Fault-Ride Through / Voltage Tolerance

Low voltage ride-through (LVRT) capability became a common requirement for wind plant interconnection due to both increasing plant sizes and greater wind generation penetration [9]. LVRT requirement evolved over the past 5+ years, starting with a history of deliberate tripping on low voltage. The current FERC Order 661A requires that wind generation not trip for zero voltage (i.e. bolted 3-phase fault) at the POI for 9 cycles. This latest version of the requirement is often called "zero-voltage ride-though." The standard also requires tolerance of arbitrarily long duration backup cleared single-phase-to-ground faults. Zero voltage ride through (ZVRT) requirements are now standard in much of the world, including most North American systems [10, 11, 12, 13]. As an example, some ZVRT standards require wind plants to remain in-service during normally cleared system faults with zero pu voltage at the point of interconnection for up to 9 cycles. NERC is updating standard PRC-024 for all generators. The current proposal for ZVRT is shown in Figure 11. A uniform North American standard for fault-ride through will eliminate confusion and unnecessary costs associated with localized rules.

3.2.1.1. Low Voltage and Zero Voltage Ride-through

Many OEMs have WTGs that meet these fault tolerance requirements. Since staging faults on operating grids is expensive, risky, and disruptive, testing is usually performed in a more controlled environment.

The following test results were provided by WINDTEST K-M-K GmbH, an independent testing group, for an operating GE 1.5 MW (type 3) wind turbine generator. A 200 ms, 3-phase fault-to-ground was applied to the medium voltage bus. Figure 7 shows the rms voltages for each phase

of the faulted bus. Figure 8 shows one of the voltages again, as well as the real power delivered to the medium voltage bus. The wind turbine remains in service during the fault, and power output recovers to the pre-disturbance level at a controlled recovery rate in under 200 msec.

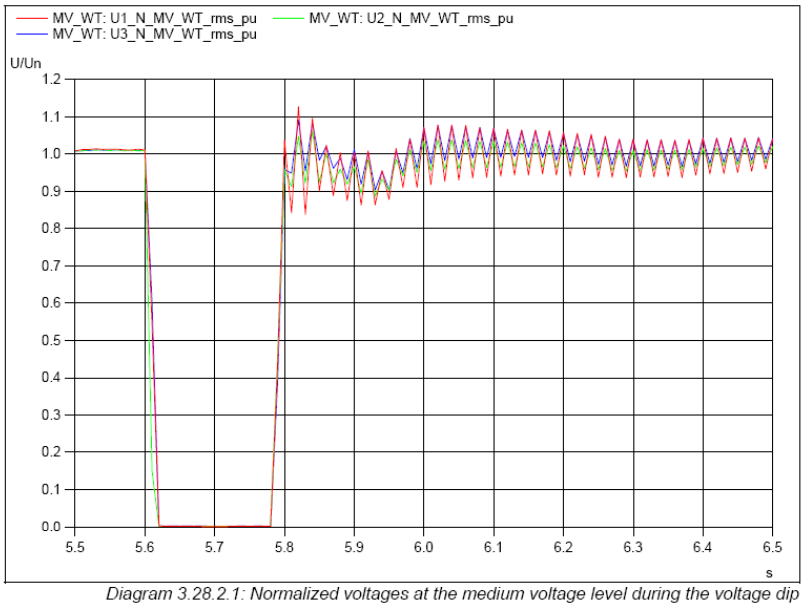

Figure 7: Demonstration of 1.5 MW ZVRT capability (voltage)

Similar ZVRT performance can be provided by a full converter (type 4) wind turbine generator. Test results demonstrating this capability for GE 2.5 MW WTG are shown in Figure 9 and Figure 10. Figure 9 shows the machine is initially operating at near rated power output and near zero reactive power output. A 3-phase fault to ground is then applied for 200 ms, as shown in Figure 10. The wind turbine rides through this fault and returns to normal operation after the fault is removed.

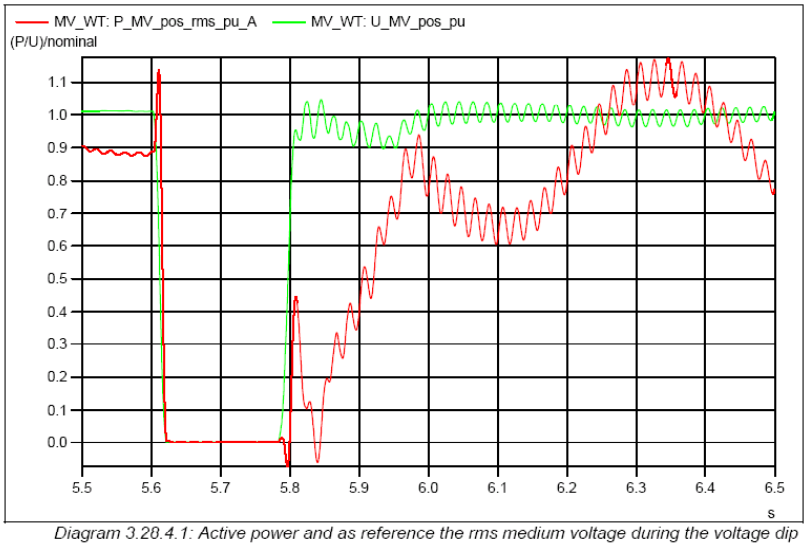

Figure 8: Demonstration of 1.5 MW ZVRT capability (power and voltage)

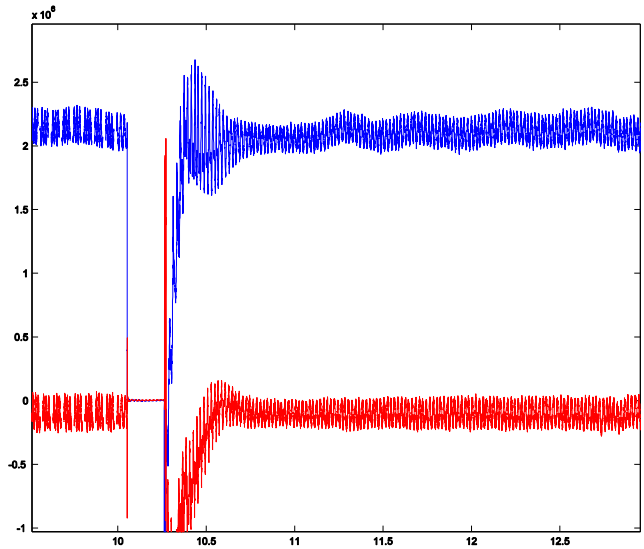

Figure 9: Demonstration of 2.5 MW ZVRT capability (real and reactive power).

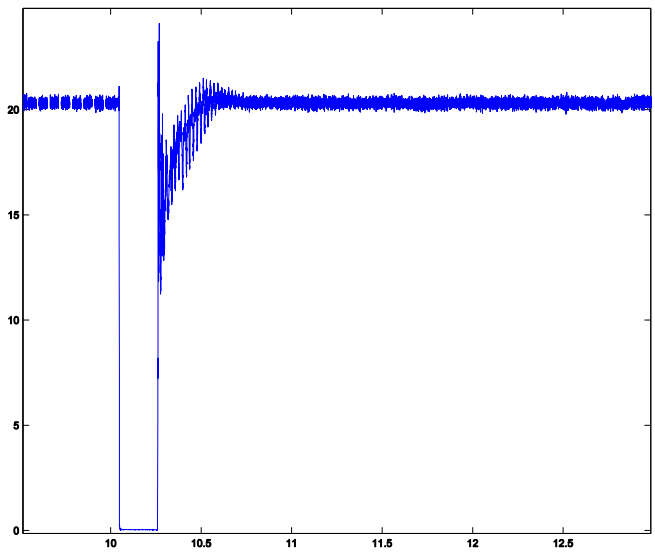

Figure 10: Demonstration of 2.5 MW ZVRT capability (voltage).

3.2.1.2. HVRT

There has been considerable recent discussion on high voltage ride-through (HVRT) requirements. These discussions have not had the depth nor the technical sophistication as the several years of debate about low voltage tolerance.

The proposed limit high-voltage limit (red curve) in Figure 11 is reasonably interpreted as starting when the voltage exceeds 110% of normal (not when a system fault occurs and initiates a voltage depression). The required HVRT tolerance would reasonably be specified as a

cumulative duration of withstand, as is the common and accepted practice for other power system equipment, and not be specified as an "envelope" defined by elapsed time from some initiating event. (A realistic overvoltage event typically has multiple short excursions into the overvoltage domain, and only these excursions are relevant for overvoltage performance.) Such a standard would more appropriately reflect the stress that must be endured by the equipment in terms consistent with overvoltage withstand standards applied to other power system equipment.

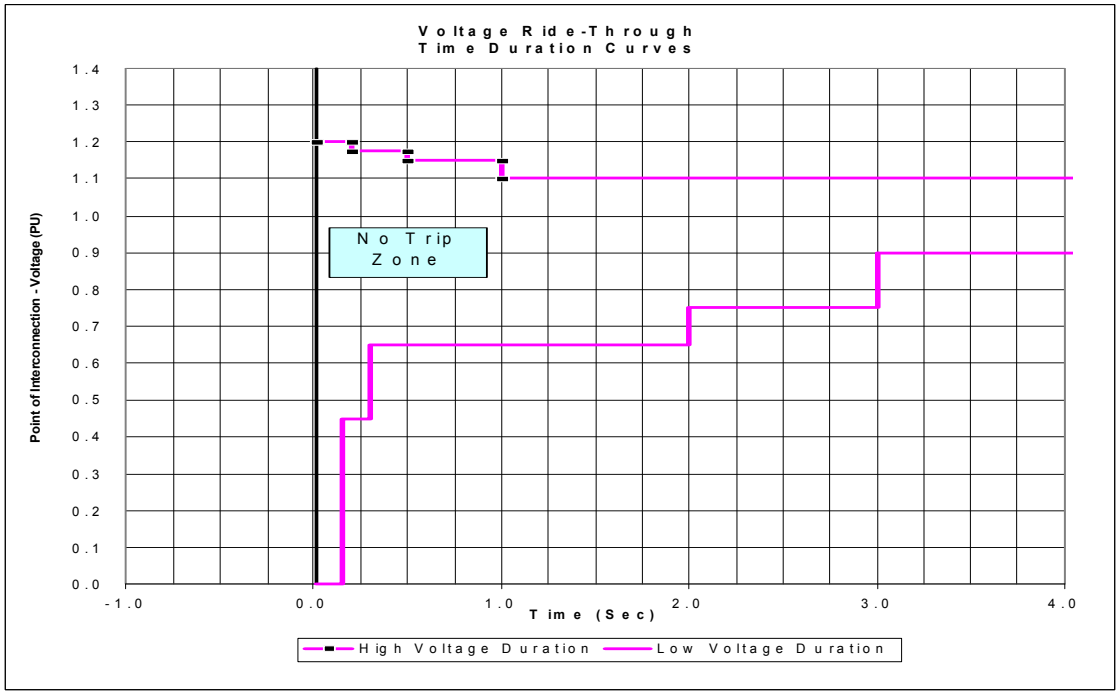

Figure 11: Voltage ride-through criteria from recent proposals by NERC.

3.2.2. During Fault and Post Fault recovery characteristics

Some international grid codes are asking for very specific active and reactive power performance during faults. Typically, but not always, these codes require an increase in reactive current delivery during faults (and deep voltage depressions), and they may also require suppression of active power. Some codes also require rapid recovery of active power after the clearing of faults. Some of these codes are very strict. This has the risk that (a) overly prescriptive during-fault codes are unreasonable in that they are very hard to meet and not necessary, and (b) that excessively fast active power recovery is actually bad for the power system. Excessively fast active power recovery will tend to aggravate post-fault recovery swing and voltage dynamics. Recovery on the order of few hundred milliseconds has worked well in interconnected systems.

3.2.2.1. Low voltage active power limitation and recovery

It is impossible to deliver power through a zero voltage. Utility practice has evolved that recognizes this and that takes into account the inherent electrical behavior of synchronous generators. During system faults, synchronous machines (as dictated by Park's equations)

experience drop in electrical power output and accelerate. Once faults are cleared, the accelerated machines must be slowed down and returned to steady-state synchronism with the grid. The active power behavior of synchronous machines during and immediately following grid faults is dominated by this behavior is almost completely uncontrolled (although excitation systems and governor response have some limited capability to affect acceleration and resynchronization). This is well understood by system planners. Much of ISO-NE's planning and operating practice is focused on maintaining system stability. Unlike synchronous machines, type 3 and type 4 wind turbines, are not dependent on turbine speed control to maintain synchronism. Active power can be controlled to a considerable extent by the WTG electronics. Thus, it is possible to reduce active power injection during faults, and to delay or slow the rate of recovery active power injection to the grid following system events. This type of control tends to reduce the severity of system recovery voltage transients and can help other synchronous machines maintain stability (e.g. increase critical clearing times). There is no industry consensus on requiring this behavior. Recovery within ½ second is consistent with the swing dynamics of interconnected systems like ISO-NE. One OEM (GE) limits the active power during deep voltages depressions and limits the recovery to rate of 5.0 p.u. /sec. That has been shown to give good system performance in tests. Some (non-US) grid codes have required extremely fast recovery (e.g. 0.1 s) following grid faults. This is likely to be neither necessary nor beneficial for ISO-NE. Since power behavior of synchronous generation during faults is largely uncontrollable and not subject to grid code requirements, imposing tight controls on wind plants for this is unreasonable and would likely be detrimental to overall grid performance.

3.2.2.2. Low voltage reactive current delivery

It is well understood that reactive current delivered by generators during faults helps moderate the severity and geographic reach of the accompanying voltage depression. Most wind generation technologies can deliver some reactive current during voltage depressions. In general the current delivery is less than that for similarly sized synchronous machines as observed in the short circuit modeling discussion in section 3.6.3. Unlike synchronous machines, the reactive current can be controlled to some extent during faults. Some grid codes have recognized this, and have required stringent control of reactive current during disturbances. This is technically challenging. In so far as specific equipment allows, ISO-NE should encourage wind plants to deliver as much reactive current as is practical with the available equipment during voltage depressions below a nominal level (e.g. 90%). In this context, "practical" means that, for example, equipment controls should be set to deliver as much reactive current as the equipment allows. It does not mean that additional hardware be provided to further increase reactive current beyond this level. Such requirements do not apply to islanded conditions, which must be avoided, as discussed in section 3.2.6 .

3.2.3. Frequency Tolerance

Generally tolerance to (as opposed to 'response to', which is discussed below) grid frequency excursions has not been a major concern for wind generators. Most WTGs are as (or more) tolerant of frequency excursions as conventional synchronous machines. Present NPCC rules as shown in Figure 12 for frequency ride through are well suited to modern wind generation.

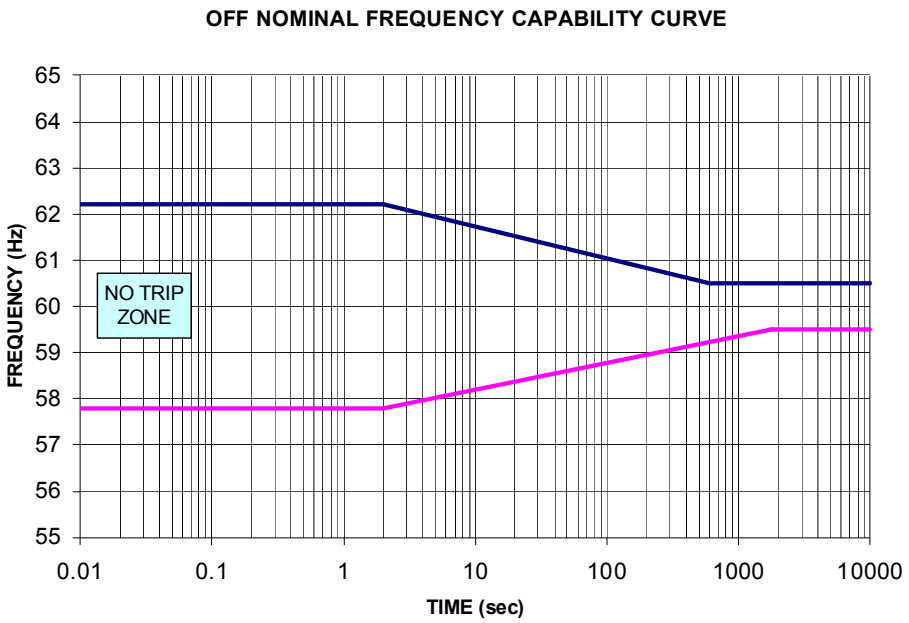

Figure 12: NPCC Frequency tolerance requirements

3.2.4. Rate of change of Frequency

The tolerance of WTGs to rapidly changing frequency has emerged as a concern in some smaller and highly stressed systems recently. Typically, following loss-of-generation events, the power system may experience a rapid drop in frequency. With WTGs (type 3 and 4) being dependent on power conversion systems, the concern is that the equipment be able to track the rapidly changing frequency. Initial drops on the order of 1-2 Hz/sec can be found for severe events in big systems. Some small systems have mandated tolerance to rates as fast as –4Hz/sec, but such rates are only found in small grids. The Irish grid code [13] requires capability to handle ±0.5 hz/sec changes. While this may be a reasonable requirement for ISO-NE, it is not recommended that ISO-NE adopt any rate-of-frequency requirements. It is unlikely that this will be a significant concern for New England. Concerns related to possible breakup and islanding of New England are addressed in section 3.2.6.

3.2.5. Start-up and Shut-down

Starting and stopping a large wind power plant can be disruptive to other generation equipment in a utility system when the power production of the plant is near or at its rated value. Rapid loss of plant output when all the wind turbines are quickly disconnected from the system can create under frequency and power balance problems. Conversely, rapid start-up of a wind plant that has been shut down, for some reason other than lack of wind, can create over frequency and power balance problems. It is appropriate to recognize that there are different circumstances for which plant will start-up and shut-down, and requirements for those circumstances are different.

3.2.5.1. *Normal Start-up and Shut-down*

Plants can employ a means to control the rate of change of power when a wind plant is shutdown and disconnected from the grid. An operator can send a shutdown signal to the plant controller initiating a controlled shutdown response. The control immediately interprets the shutdown command to begin reducing the power of the plant and start sequencing off turbines. Similarly, operator command can initiate a start-up sequence. Start-up of a plant where there is significant wind can have ramp limits applied.

Figure 13 depicts a shutdown sequence for the GE site that had 38 available and operating wind turbines and was programmed to shut down over a five minute interval. It shows the power of the plant decreasing to zero over five minutes and the number of on-line generators. Start-up sequences exhibit similar behavior to that shown in Figure 13.

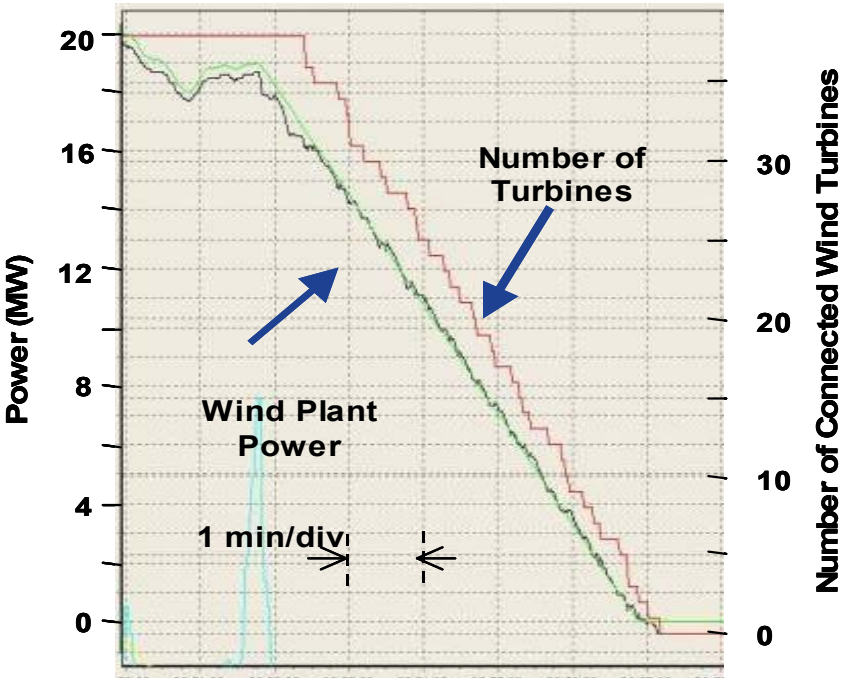

Figure 13: Demonstration of wind plant shutdown sequence

3.2.5.2. *Emergency Shutdown and Post-Emergency Restart*

When grid events cause wind plants to shut down, it may be desirable for the ISO to specify performance that is different from that described in the previous section. For example, should system analysis show that the post-disturbance conditions for specific individual (or class of events) are unable to support power transfers from wind plants, then restart should be blocked. It will be incumbent on ISO-NE to determine the conditions for which restart should be blocked[1]. ISO-NE practice for restarting other types of generation tripped by grid events should be applied to wind plants. Wind plants must have the capability to receive commands from the ISO that prevent restart, much as they must accept commands to curtail output. Under no

[1] It is easy to envision a condition for which loss of a critical north-south EHV tie-line in New England could result in a substantial drop in transfer capability. Wind plants could be blocked from restarting under such conditions.

circumstances should wind plants be allowed to try to restart into a black system (as discussed further in the next section.)

The ISO always retains the ability to trip wind plants by opening the plant breaker. This is the same as with other types of generation, and as with other generation, is to be done only at grave need. The wind generation equipment is subjected to considerable mechanical and electrical stresses for a full load rejection. A shutdown command to the plant is greatly preferred.

3.2.5.3. High speed cut-out

A sudden loss of wind generation is perhaps the greatest fear of system operators. Over the past decade, there have been a few well-publicized events where significant wind generation in a balancing area was lost due to very high wind speeds across a large region, such as the ERCOT events of March 15, 2007 and February 26, 2008, or the Danish event of January 8, 2005. Most commercial wind turbines utilize pitch control or other mechanisms to "spill" wind energy when wind speeds exceed the level required for nominal maximum power production. This results in a large region of rated power production over a wide range of wind speeds, which by itself is a highly desirable characteristic. However, at excessive wind speeds, usually 25 m/s or greater, mechanical loads and stresses necessitate a shutdown of turbine operation, also known as high-speed cut-out.

As the events referenced above, illustrate, the loss of large amounts of wind generation over a few hours can place significant demands on operators, or possibly compromise system reliability. The operational implications of loss of generation over hours are different than that associated with discrete plant trip loss-of-generation events. It is a common misconception that large amounts of wind generation can go from full power to off in a single step. This does not happen. While improved wind generation forecasting for operational situational awareness is often cited as a preventative measure, there are modifications to wind turbine operation that may also contribute positively. Figure 14 illustrates the modified power curve for a turbine designed to gradually reduce production in very high winds.

It should be noted that such a modification is not trivial. Continuing operations in very high wind speeds has significant implications for the mechanical and structural design aspects of the turbine; for example, while the "lift" component of the aerodynamic energy capture can be well-controlled through pitching of the blades, the "thrust" component will increase with wind speed, placing higher stresses on the tower, blades, and drive train.

At this time, the complexity and additional stress on the wind generation equipment does not appear to justify this function in a large system like ISO-NE. It is not recommended that this be required.

Regardless of whether such controls are implemented to reduce the impact of high wind speed shut-down, in general wind plants should be allowed to return to service automatically when wind and grid conditions allow. Since both cut-out and recovery events occur over a period of time (like the cases described above), the production variability ought to be within the response capabilities of the ISO-NE grid. The default practice should be that wind plants are allowed to restart after a high wind speed event, unless they are explicitly instructed to curtail by the ISO.

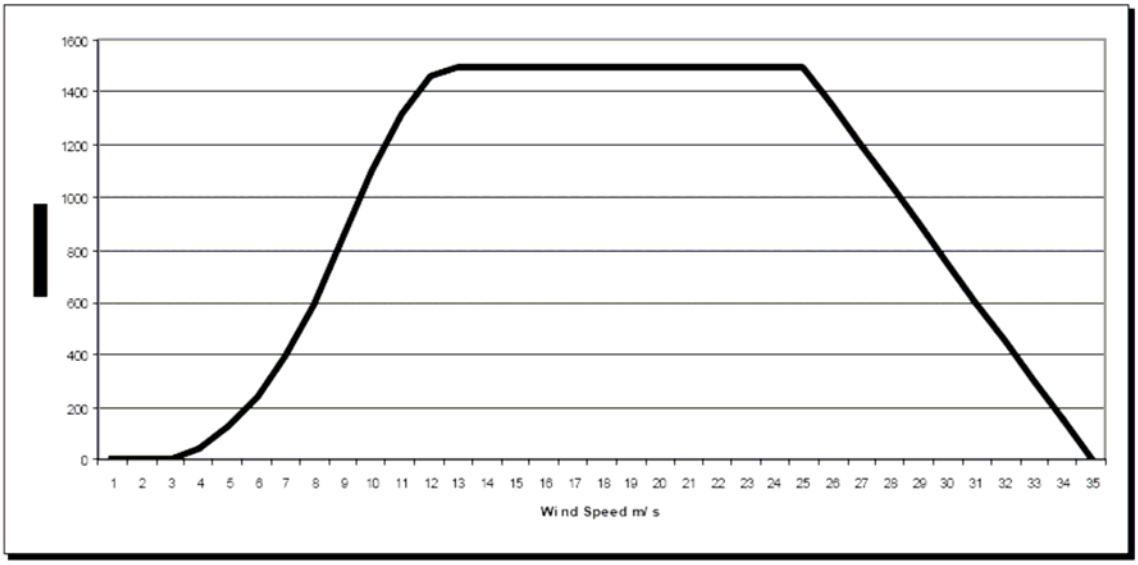

Figure 14: Power curve for advanced wind turbine with gradual high-speed cutout

3.2.6. Islanding and Weak Grid Operations

The technology and controls necessary to allow wind plants to operate in isolation or islanded is not generally available today. In this context, "islanded" refers to a usually small portion of the power grid, with little or no other synchronous generation, being separated by switching action from the larger grid. It does not refer to inter-regional conditions for which (for example) all of New England separates from the Eastern Interconnection. In order to operate in a system with no other sources, generation must have the ability to set system frequency and voltage. While voltage control is available (and should be required for wind plants), isochronous frequency control is not. ISO-NE should not require that wind plants have the ability to operate in islanded mode.

Generally, wind plants and wind turbine-generators are provided with equipment protection (relays, breakers and controls). This equipment is intended to protect the wind generation and related equipment. It is not designed to protect other equipment unrelated to the wind plant. It is therefore ill-advised to rely on the protective action of wind generation to mitigate protective risk to customers. ISO-NE should require that any wind plant or individual wind turbine that has the potential to be islanded with customers have an active relaying scheme, such as transfer trip, that disconnects the wind in event of relay/breaker action that can create that island.

A further consideration is that the majority of wind generation being built in North America is type 3 and type 4 (as discussed in sections 3.1.3 and 3.1.4). These generation types utilize power electronics to interface to the grid. The power electronics of these devices require a minimum level of short-circuit strength to reliably operate. Similarly, type 1 and type 2 generation (per sections 3.1.1 and 3.1.2) typically have shunt capacitors. Islanding or operation into low short circuit strength systems creates a risk of self-excitation, which must be avoided. Usually, other synchronous generation must be running in electrical proximity to the wind plant

before it can run. One good metric of proximity is short circuit ratio (SCR), i.e. the ratio of the grid short circuit MVA at the point of interconnect to the wind plant MW rating. Application rules vary by wind OEM, but SCR levels above 5 are typically robust; levels below this should be applied with some care and levels below 2 need considerable care and may be outside of specific wind generation equipment capabilities. In the context of islanding, small subsystems which include some customer load, some other synchronous generation and wind generation should be treated as islands when the short circuit ration of the wind plant drops, due to switching operations, below a minimum threshold. ISO-NE should require that the viability of such subsystems for short circuit ratios below 2.0 be demonstrated, if transfer tripping is not provided.

3.3. VOLTAGE CONTROL AND REACTIVE POWER MANAGEMENT

FERC order 661-A requires -.95 to +.95 power factor at the Point of Interconnection (POI). This is a recent step in an evolution of generator standards that define power factor range requirements at the terminals of individual synchronous generators. Since wind plants consist of multiple WTGs and may include other reactive power equipment, definition of required power factor range at the POI allows technology neutral means of meeting system performance objectives.

It should be noted that the intent of the power factor range requirement is currently open to multiple interpretations. Specifically, one widely used “permissive” interpretation of the rule is that wind plants satisfy the requirement if the plant power factor remains anywhere within this range during operations. The other “prescriptive” interpretation, which we believe is consistent with the intent of the requirement, is that wind plants must be able to deliver controlled reactive power, such that the power factor can be set or controlled to any level within the specified range. This second interpretation is consistent with conventional synchronous generator interconnection. Many wind plants are presently being designed and commissioned subject to the first interpretation in North America.

The other key distinction is that FERC Order 2003a places the onus on the host system to prove the need for wind generation to deliver reactive power. System studies must show that delivery of reactive power from proposed wind plants is necessary for system reliability and operation, before requiring such capability of prospective new wind generators. Unfortunately, there is no established mechanism by which host systems can prove such a need, and this is starkly at odds with the requirements imposed on other types of generators. ISO-NE LGIA Item 9.6.1 requires the full ±0.95 power factor range, but provides an exemption for wind plants. This exemption is no longer warranted.

3.3.1. Wind turbine types and reactive capability

The different types of WTGs described in Section 2.1, have quite different reactive power capabilities.

Type 1 and 2 machines always consume reactive power, as illustrated by Figure 3. Wind plants with Type 1 and 2 WTGs use SVCs or STATCOMs and/or switched capacitors and reactors if controlled reactive power is required.

Type 3 and 4 machines may (or may not) have substantial reactive power capability. That capability may be available at all power levels, or be described as a power factor capability. For example, GE wind turbines have reactive power capability corresponding to a power factor of 0.90 lagging (overexcited) to 0.90 leading (under excited), measured at the machine terminals. The full reactive range of the turbine is available above the cut in speed regardless of the power level, as shown in Figure 15.

As with all other types of generation, wind turbine-generators have voltage limits. Reactive power delivery requirements must be subject to these limits. Generally, it is challenging for any generator to deliver large amounts of reactive power (run over-excited) when their terminal voltages are high, and conversely, to absorb large amounts of reactive power when their terminal voltages are low. Since these conditions make little sense from a grid perspective, there is little concern. Some grid codes explicitly recognize this limitation, and make provision. The UK grid code [14] is a good example.

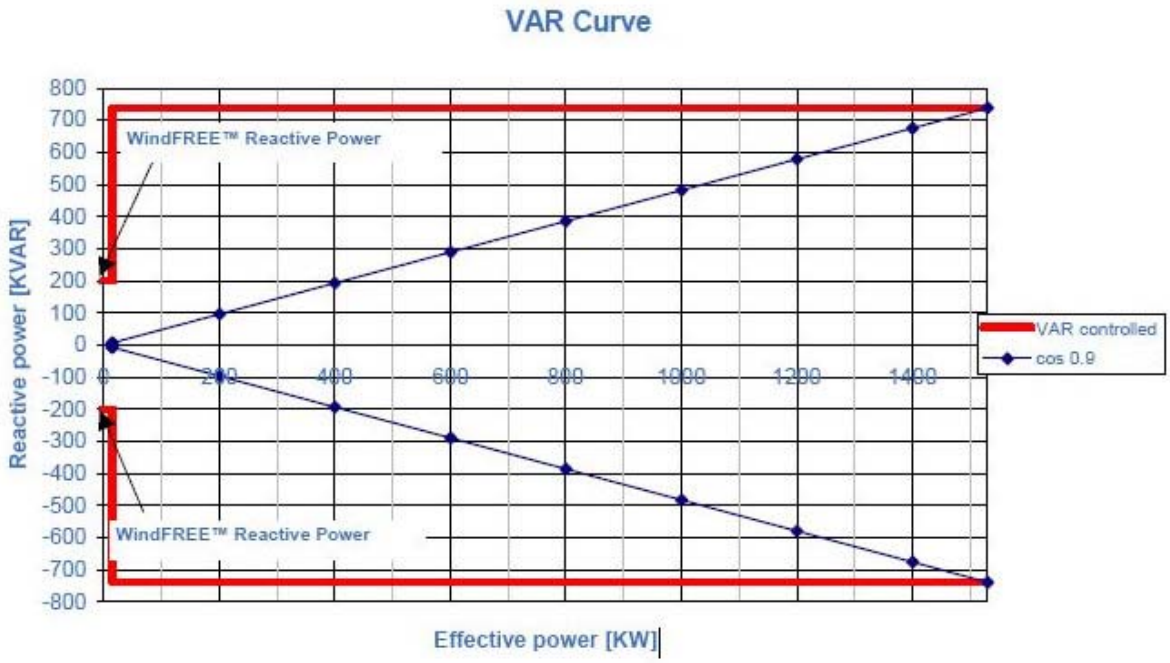

Figure 15: Reactive Capability of GE 1.5 (type 3) WTG

3.3.2. Wind Plant Controls

Some wind plants have supervisory controls that regulate the net real and reactive power interchange of a wind plant with the grid. This allows the wind plant to regulate voltage magnitude of the grid, provide governor frequency response, and minimize rates of power change. In the US, plant level voltage regulation is required.

Wind plant control systems can be hierarchical schemes that control individual wind turbines in order to implement closed-loop regulation of grid parameters such as voltage or power, or grid-interface parameters such as power factor or net power output.

3.3.2.1. Voltage controls

Power plants are normally required to regulate bus voltage at the point of interconnection. This is normally the high-side bus of the plant's step-up transformer. Conventional plants with synchronous generators regulate bus voltage by controlling field current with an excitation system. As with conventional plants, voltage schedules for wind plants should be provided by the grid operator. Anecdotal evidence suggests that grid operators in North America often do *not* provide wind plants with voltage schedules. This practice increases the risk of poor grid voltage performance (both in steady-state and for grid events), and should be avoided.

There are several basic schemes for regulating voltage with a wind plant:

- By using controlled reactive compensation devices (capacitors, reactors, SVC, STATCOM) in the plant substation, or
- By controlling the reactive power output of individual wind turbines, or
- By a combination of both.

Figure 16 shows a typical wind plant with induction generators WTGs (Type 1 or 2). These types of WTGs often operate with each WTG holding a constant power factor. The reactive power exchange at the point of interconnection (POI) is controlled by reactive compensation equipment in the substation, usually connected to the low-voltage bus (a combination of switched capacitors, switched reactors, SVC or STATCOM, depending on interconnection requirements).

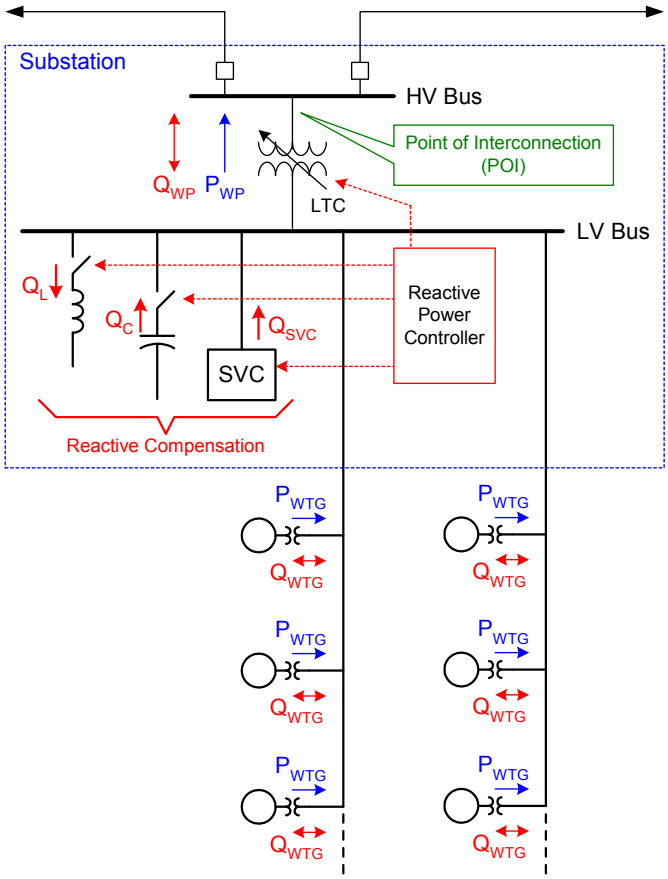

Figure 16: Wind plant with WTGs that operate with constant power factor. Voltage or power factor at POI are controlled by reactive compensation devices in the substation.

Figure 17 shows a typical wind plant with DFAG or full conversion WTGs (Type 3 or 4). These types of WTGs have the capability to quickly and continuously adjust their reactive power output and thereby contribute to regulating voltage at the POI. The scheme depicted in Figure 17 includes a reactive power controller in the substation that measures voltage at the POI and adjusts the reactive power output of the WTGs to regulate the voltage at the POI. Depending on the requirements of the specific plant, this basic control scheme can be supplemented by switched reactors or capacitors, or LTC. Figure 18 shows an example of the performance of this type of voltage control scheme at a 160 MW wind plant in the western US with GE WTGs.

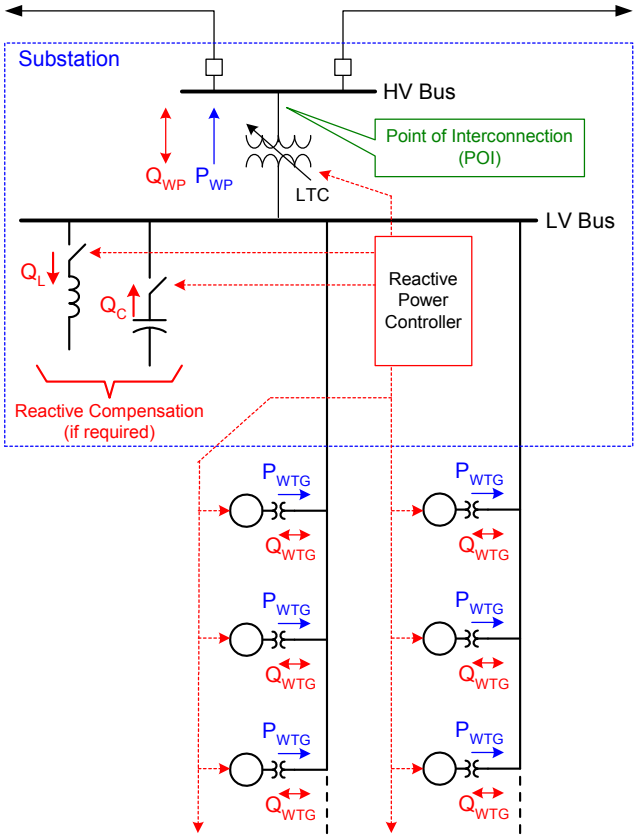

Figure 17: Wind plant with WTGs that can control reactive power output and regulate voltage.

Despite rather large variations in generated power, the voltage at the interconnection bus is quite invariant. The voltage flicker index, Pst, is less than 0.02 for this high stress condition – well within industry expectations. Most of the voltage variations are within a few hundred volts on the 230kV system.

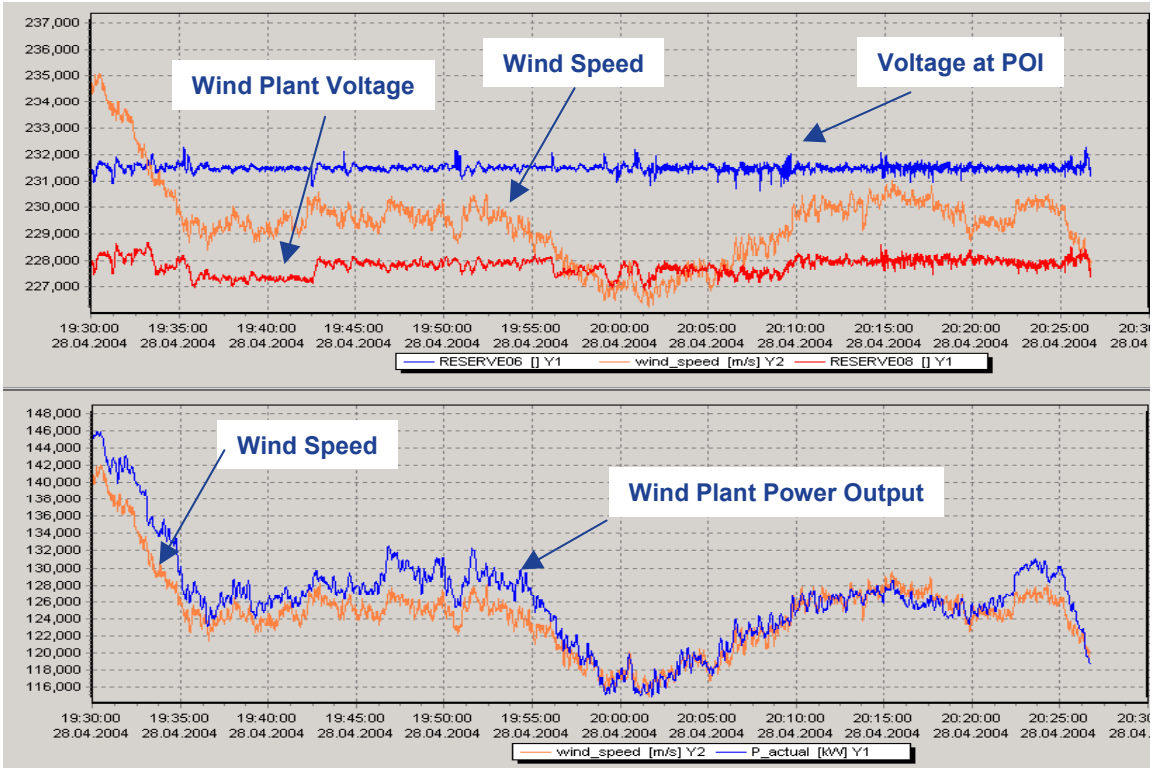

Figure 18: Demonstration of voltage regulation performance during variable power output conditions

3.3.2.2. Optimum mix of dynamic and static reactive capability

System planners and operators recognize that there are operational benefits of fast, smooth reactive power delivery capability. Such capability may come at a price; for example mechanically switched capacitors (MSCs) are much cheaper than SVCs. But SVCs have dynamic characteristics that are superior. (New England Electric would not have built the Chester SVC if simple mechanically switched capacitors had met the system needs.) Grid code developers have recognized this difference, and there have been some attempts to quantify the dynamic performance requirements for wind plants. Considering Figure 16, reactive power is provided from mechanically switched capacitors, SVCs and wind turbines. What is the requisite size of the SVC compared to the rating of the MSCs? Some grid codes have skirted this issue by requiring that wind plants respond to changes in reactive power requirements within a specified period of time. Others have required that a fraction, e.g. for 0.95 lag and 0.985 lead be provided by fast vernier sources [16]. No broad industry consensus has emerged. For the near future, it is recommended that ISO-NE requirements should be based on dynamic simulations of voltage performance for system disturbances. Voltage recovery performance should be consistent with ISO-NE planning criteria.

3.3.2.3. Coordination of Multiple Plants

Since wind plants are often connected in remote and relatively weak portions of grids in North America, it is common for plants to have voltage control strategies that integrate to drive voltages to the provided reference (i.e. no droop). Such controllers have the benefit of

providing tight voltage regulation performance over a range of grid conditions. However, as with all power system applications, independent integral controllers cannot have competing control objectives. Thus, when multiple wind plants are to be connected in electrical proximity, coordination of the voltage controls is necessary. This is, of course, fundamentally no different than the need to provide such coordination with other generation. Industry practice with conventional generation usually has individual plants (or generators) using voltage droop. This can be accomplished with proportional-only regulation, line drop compensation, supervisory controls or a combination of these. Planning studies should check that regulators perform satisfactorily together. This includes avoiding divergent reactive power output (one plant over-excited while another nearby plant is under-excited), and reasonable division of reactive power support between plants. In short, multiple wind plants should be treated like multiple unit conventional power plants.

3.3.2.4. Voltage control at low power levels

At low wind plant power levels, operational flexibility may be limited compared to operation at or near full power. At low wind levels, some wind turbines within a plant may not be running (due to low wind speeds). This means that plants that rely on the wind turbines or equipment at the individual turbines for reactive support will have reduced reactive power capability. Thus, requiring a full range of reactive power capability down to low power levels may impose unreasonable burden on the plant. The UK grid code [14] addresses this limitation with a permissive interpretation of the reactive power and voltage control requirement for power levels below 20% of rated. [See Figure 1 on page cc-15 of the code. This permissive interpretation means that a plant may operate anywhere in the reactive power range corresponding to ±0.95 power factor of 20% of plant nameplate, whenever the plant power output is below 20% of its nameplate rating. This works out to be ±6.6 MVAr for power levels between zero and 20MW for a wind plant rated at 100 MW.

Figure 19 illustrates this concept for a 100 MW wind plant. When the plant is operating above 20 MW, it would be required to regulate voltage by controlling its reactive power output between –32.9 MVAr and +32.9 MVAr. But when power output is below 20 MW, the plant would be required to stay within ±6.6 MVAr (the shaded area).

The Electric Reliability Council of Texas (ERCOT) is reportedly considering a similar concept, with a threshold of 10% of rated power.

3.3.2.5. No-wind VAr production and voltage control

A recent advancement in wind turbine generator technology provides controllable reactive power output even when the wind turbine is stopped. All wind turbines stop in response to sustained wind speeds below a minimum threshold or when wind speed exceeds a high speed cut-out. They may also be disconnected from the grid in response to severe system disturbances. In plants that rely on the turbines for reactive power, both real power to serve load and reactive power to support system voltage are lost under such conditions.

Some OEMs offer WTGs that can provide smooth fast voltage regulation by delivering controlled reactive power even when the wind turbines are not generating active power. Such a function cannot normally be provided by conventional (e.g., thermal, hydro) generation, since production of reactive power from these generators requires that the generator (and therefore the turbine)

continue to spin at synchronous speed. Continuous voltage support and regulation provides a major grid performance and reliability benefit.

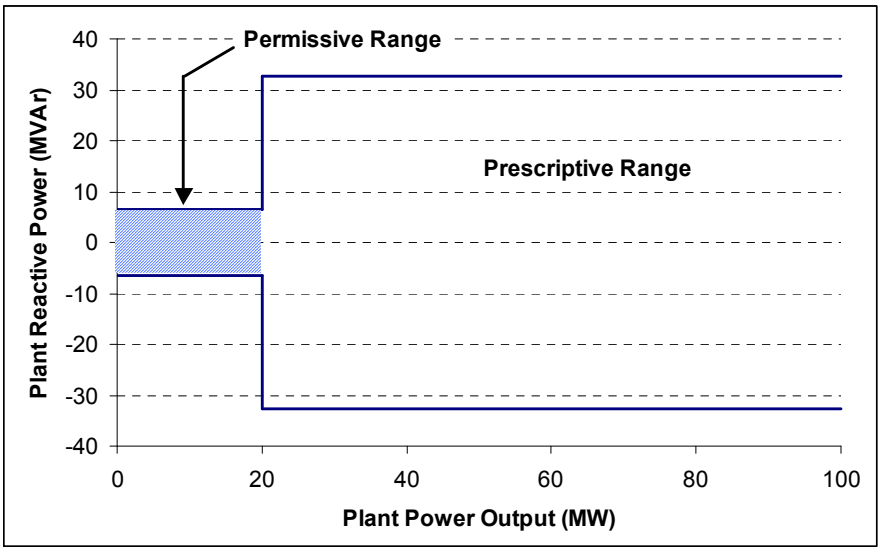

Figure 19: Plant reactive power range as a function of power output

From a systemic perspective, the reactive power capability is similar to that provided by various dynamic reactive devices (e.g., synchronous condenser, SVC, STATCOM [6]), which are used for grid reinforcement where dynamic voltage support is required.

The most significant benefits are observed for systems with substantial dynamic reactive power requirements. This includes very large wind plants, plants that are physically remote with electrically weak connections to the grid, and plants in areas with heavy and variable loads. Wind power plants equipped with this feature will provide effective grid reinforcements by providing continuous voltage regulation.

Type 3 & 4 wind turbine generators use large power converters. This decouples the generator speed from the power system frequency. The power converters rely on two major components: the generator side converter and the line side converter, which connects to the grid. If the line side converter is self-commutating, it may have the capability to independently deliver active and reactive power. When there is no active power available from the turbine, the converter can continue to deliver or absorb reactive power.

Test results for a single (GE type 4) wind turbine operating with this type of control are shown in Figure 20. Initially, the real power output is zero, while the reactive power output is about 1100 kVAr. Then, the wind picks up (at about 527 seconds) and the real power increases, while the reactive power remains constant.

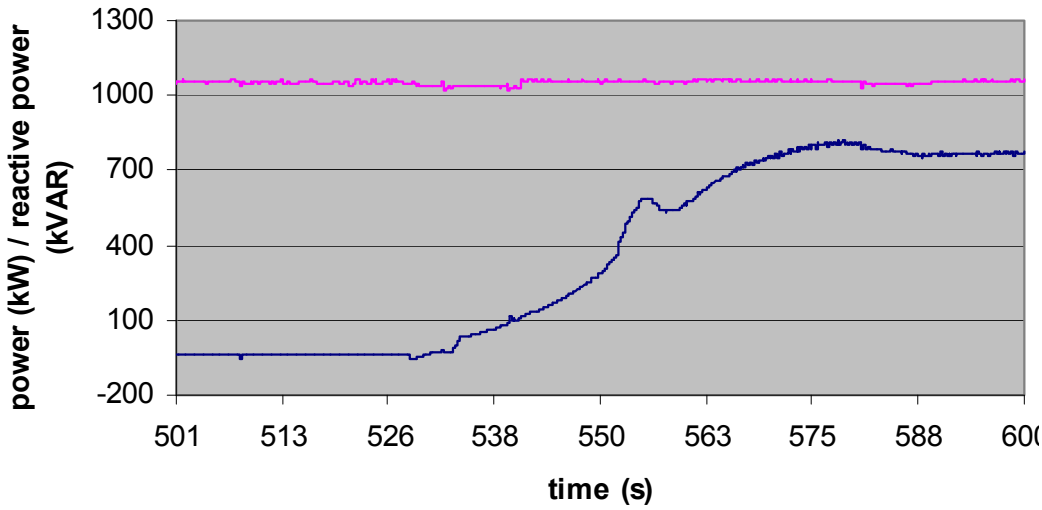

Figure 20: Demonstration of no-wind reactive power capability

3.4. ACTIVE POWER CONTROL

The advanced active power controls offered by some OEMs manage the electric power output of wind turbines and wind plants to achieve various grid-related performance objectives. This capability has implications in different time frames and applications.

Turbines without pitch control cannot limit their power output. However, wind plants with multiple wind turbines can limit or reduce total plant power output by shutting down some of the turbines in the plant.

Turbines with pitch control are capable of curtailing power in response to a real-time signal from an operator by adjusting the pitch of the turbine blades (i.e., "spilling wind"). Wind plants with such turbines are able to limit or regulate their power output to a set level by controlling the power output on individual turbines, as shown by the multiple red traces in Figure 21.

The ability of wind turbines to adjust their active power production by pitch control and, in the case of type 3 and 4 machines, by control of the power converters, has wide implications for grid operation. The discussion provided in this section addresses different aspects of performance and capability as they relate to grid operations.

3.4.1. Curtailment Capability

For most interconnections, curtailment capability is generally required. At the least, wind plants must trip off-line when so instructed by the grid operators. However, curtailment without tripping individual wind turbines is better. It maintains generation in reserve, reduces mechanical stresses on the equipment, and provides the opportunity for curtailed wind generation to provide ancillary services to the grid. While wind generation can respond rapidly, in many cases much faster than convention thermal or hydro generation, there have been cases where proposed grid codes have made excessive requirements for speed of response to step changes in curtailment order [13]. This is technically challenging for the wind turbine electro-mechanical systems and should be avoided. Capability to move active power output at rates on

the order of 10%/second in response to step changes in curtailment (or dispatch) appear to be within several, if not most, OEM's capabilities. ISO-NE should monitor developments in this area.

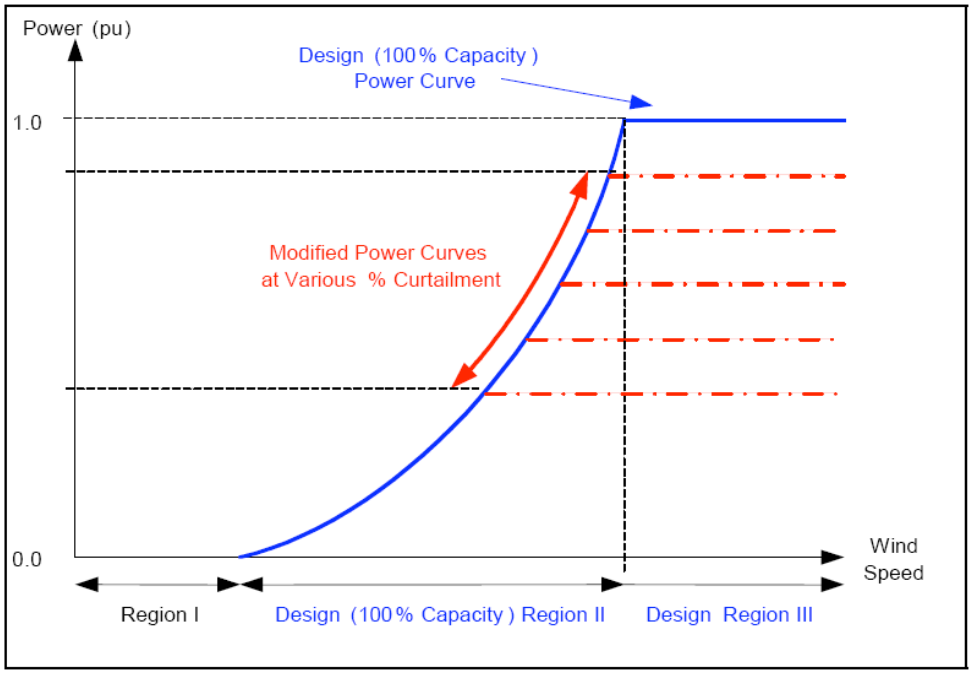

Figure 21: Curtailment of WTG output using blade pitch control (Source: BEW report for CEC, May 2006.

3.4.2. Ramp Rate Controls

Since pitch controlled WTGs can limit their active power output, they are also capable of controlling the rate of change of power output in some circumstances, including:

- Rate of increase of power when wind speed is increasing
- Rate of increase in power when a curtailment of power output is released
- Rate of decrease in power when a curtailment limit is engaged

These functions could be implemented either at an individual turbine level or at a plant level.

Figure 22 demonstrates the power ramp limiter maintaining a specified rate of change in power output for a plant with GE wind turbines. The power ramp limiter is able to track and limit to two simultaneous ramp rates that are measured and averaged over two different time frames. The two ramp rate limits allow targeting of different potential grid operating constraints. Specifically, a short window (typically 1-minute) ramp rate limit addresses possible limitations in system regulation capability. A longer window (typically 10-minutes) addresses possible limitations in grid load-following capability. As with the governor response discussed above, this functionality is most likely to be valuable and economic at times of high wind and light load.

In the figure, initially, the wind power plant is curtailed to 4 MW. Then the curtailment is released, and the plant is allowed to ramp up at a controlled rate of 5% per minute (3 MW/min or 50 kW/s) averaged and measured over a one minute interval. The second longer time frame ramp limit was set at 3.3 %/min (2 MW/min) and averaged and measured over a 10 minute interval (20 MW per ten minutes).

Ramp-rate limits can be set to meet the requirements for specific grids and applications. Ramp-rate limits can be imposed for grid operating conditions that warrant their use, and ought not be continuously enabled. The controller allows for switching in and out of ramp-rate control by either the plant operator or in response to an external command. This ability to enable or disable ramp rate limits is valuable to the grid, as wind energy production is reduced by up ramp rate controls. Industry practice is not mature regarding appropriate limits. The lowest (slowest) limits of which the authors are aware are 5%/minute (on the base of the plant MW rating). This rate limit allows a plant to reach rated power from initial synchronization in 20 minutes. Barring further systemic evidence of a requirement for more severe (i.e. lower) ramp rate limits, ISO-NE should require that ramp rate limiters have the capability to limit ramp rates to 5%/min or more. As the figure suggests, perfect ramp rate controls are challenging. Expectations of perfect ramp controls are not reasonably attainable, and should not be required. Average ramp rates, based on sliding windows of a minimum duration of one-minute, are reasonable.[13]

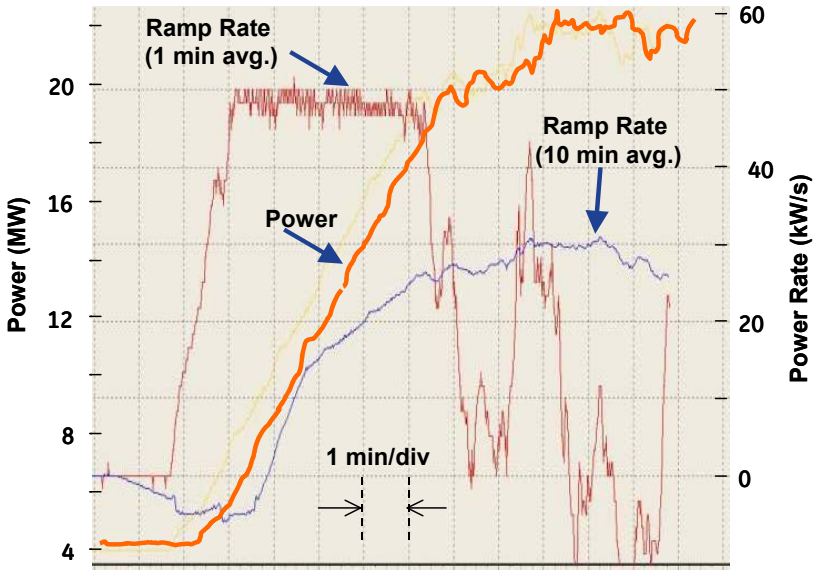

Figure 22: Demonstration of power ramp-rate control performance

Many wind plants have the ability to change active power output quite rapidly. If change in active power output is necessitated by grid events, fast response is good. However, some recent experiences in the US have surprised grid operators when wind plants have responded very rapidly to market signals. For example, wind plants have been reported to very rapidly reduce power output in response to drops in LMP. Such fast response can 'overshoot' in exactly the same fashion that other control systems with high gain can be destabilizing. Some ISOs have

moved to create rules which direct or limit the rate at which wind plants are expected to respond to market signals. ISO-NE should create such rules.

3.4.3. Accepting AGC Instructions

The ability of wind plants to curtail output, as discussed in sections 3.4.1 and 3.4.2 presents the, for now theoretical, opportunity for wind plants to participate in AGC. Since wind plants have not, to date, been designed to accept AGC dispatch signals, specific details cannot be provided here. However, wind plants should be required to respond to curtailment, and thus dynamic modification of curtailment set-points has the potential to provide AGC response. The range and minimum speed of response must be consistent with the dynamic characteristics of available wind generation. Unlike large signal frequency events during operation which are relatively rare, rescheduling associated with AGC response will occur constantly. Thus, both the amplitude and speed of response will likely need to be limited considerably compared to large signal frequency response.

3.4.4. Frequency Responsive Controls

Control of frequency is a concern for all power systems. It is a major consideration in isolated systems with no external AC interconnection. Changes in system frequency are caused by imbalances due to spontaneous load variations and mismatches between dispatched generation and the actual load level. In most grid codes for integration of new generation to the system, the primary frequency control is subject to specific requirements. Requirements generally state that all conventional generators (thermal or hydro) synchronized to the transmission system must have a speed governor system to contribute to system frequency control. From a physical perspective, governor controls adjust the amount of mechanical power being delivered to the turbine-generator drive-train. This is accomplished by controlling fuel flows, steam flows, and a familiar range of other mechanical actuations. Governor actions, while rapid, are not instantaneous, typically acting on the order of ones to tens of seconds. For wind power, the physical equivalent is to adjust blade pitch to alter lift, and therefore mechanical torque on the drive-train.

A second aspect of frequency response for synchronous generators is inertia. Inertial response of synchronous machines is due to changes in electrical torque caused by grid frequency changes. It is fast, inherent and uncontrolled. Inertial response, being inherent, is rarely addressed by existing grid codes: it is expected and included in grid stability calculations – regardless of whether the impact is beneficial or detrimental.

In the next few years, a large amount of type 3 and 4 generation are planned to be integrated on power systems, thanks to their ability to maximize power extraction, reduce wind turbine structural loading, and their attributes regarding general system behaviors. When penetration of wind turbines into the power system reaches a critical point (say more than 10% of the total energy generation), the displacement of conventional generators by wind turbines can decrease the effective primary (governor response) and the inertia of the system, resulting in larger frequency deviations, especially in isolated systems and in periods of low load.

A consequence of the above is that additional requirements are likely to be imposed on wind plants by system operators, as is already the case for several utilities including the Nordic grid operators and ESB National Grid (Ireland) who have already added a governor type frequency

control requirement in their grid codes and Hydro-Québec, which has added an inertial response requirement. ([4] to [7]).

In the discussion below, governor response and inertial response of wind generation are addressed separately. They have different operational implications and different levels of technical maturity.

3.4.4.1. Governor Response

Many double fed and full conversion wind turbines are capable of adjusting their power output in real time in response to variations in grid frequency. This is an optional control feature, implemented in wind plants where participation in grid frequency regulation is deemed necessary.

When frequency increases above a control deadband, the frequency regulation function reduces power output from the wind turbine, similar to a droop-type governor function in a thermal or hydro generating plant. A wind turbine would always be able to respond to increased grid frequency, since it is always possible to reduce power output below the total available power in the wind.

The frequency regulation function is also capable of increasing power when grid frequency decreases below a deadband, provided that the turbine's power output at nominal frequency is below the total available power in the wind. When operating in this mode (power output curtailed below total available power), the wind turbine would be contributing spinning reserve to the grid.

The Nordic and ESBNG grid operators require wind plants to be able to change the active power production as a function of the network frequency. Wind plants will have to provide frequency control only when the system requires it (e.g. at low load and high wind power output). Whereas the wind plants can make downward regulation of the production while at rated power following a sudden rise of the system frequency, they have to maintain a power margin (reserve margin) that may be called upon during a frequency decline ([4] to [6]). The expected response rate of each available online wind plant to frequency changes is at least 1% of the wind plant rated capacity per second, but could be more.

Since wind plants must 'spill' wind continuously in order to provide spinning reserve, there are substantial commercial implications: maintaining this margin results in 'free' (zero marginal cost of production) wind power being discarded. This means the opportunity cost of providing up reserve with wind plants is equal to the marginal value of that power – roughly the spot price plus tax credits plus renewable credits. Thus, it is only economically justified to *use* this capability under conditions when it is the least cost alternative. Under the vast majority of system operating conditions, providing this service with other conventional generators [2] will be more cost-effective. When the system needs this service from wind plants, they should have the *capability* to provide it.

Examples of overfrequency and underfrequency regulation performance are described below, utilizing data from staged tests at a 60 MW wind farm with forty 1.5 MW double-fed GE wind turbines.

3.4.4.2. Over-Frequency Response

Figure 23 illustrates the power response of the wind plant due to a grid over-frequency condition. For this test, the controller settings correspond to a 4% droop curve and 0.02Hz dead band. During this test, the site was operating unconstrained at prevailing wind conditions. It was producing slightly less than 23MW prior to the over-frequency condition. The system over-frequency condition was created using special test software that added a 2% controlled ramp offset into the measured frequency signal. The resulting simulated frequency (the red trace in Figure 23) increased at a 0.25Hz/sec rate from 60Hz to 61.2 Hz. While the frequency is increasing the plant power (the dark trace in Figure 23) is observed to drop at a rate of 2.4MW/sec. After 4.8 seconds the frequency reaches 61.2 Hz and the power of the plant is reduced by approximately 50%.

The over frequency condition is removed with a controlled ramp down to 60Hz at the same 0.25Hz/sec rate. In response, the plant power increases to its unconstrained power level. This is slightly higher than the unconstrained level prior to the test, due to an increase in the wind speed. The droop and deadband settings for this test are typical values. Settings can be adjusted to meet specific grid and application requirements.

Grid over-frequency events are stressful to power components. Further, temporary high frequency swings can present a reliability concern. For example, in one recent well publicized grid event [3], the high frequency backswing from a major grid disturbance caused power plant trips and aggravated an already severe event. When enabled, the response of the GE WindCONTROL™ will rapidly reduce power output for the duration of the over-frequency event. This behavior is similar to that of governor control on thermal generation, except that it is faster and allows deeper runback of power than is typical of conventional thermal generation.

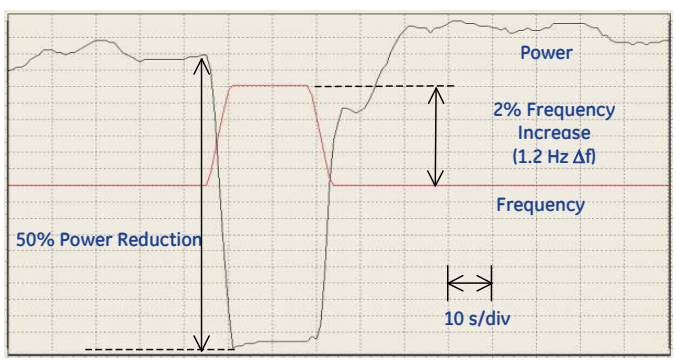

Figure 23: Power response of wind plant to overfrequency condition.

3.4.4.3. Under-Frequency and Power Reserve Response

An under frequency condition is simulated using the same test software and the results are presented in Figure 24. In order to allow for an increase of wind plant active power output in response to an under-frequency condition, some active power production must be kept in reserve. Unlike a conventional power plant, the maximum power production of the wind plant is constrained to that possible with the prevailing wind. For this test, the output of the plant was constrained to 90% of prevailing wind power during nominal frequency conditions, allowing

a 10% increase in power with a 4% decrease in frequency. The plant controller continuously calculates the available plant power based on average wind conditions and turbine availability. The controller regulates the output power to 90% (12.4MW) of this calculated value and operates the plant at this level while the system frequency is within +/- 0.02 Hz of nominal frequency (60Hz).

As the system frequency decreases, the control increases the plant power according to the droop schedule. At 57.6 Hz, 4% under frequency, 100% of the calculated available power of the plant is produced (13.8 MW). The power of the plant will remain at this value until either wind conditions reduce or the system frequency increases.

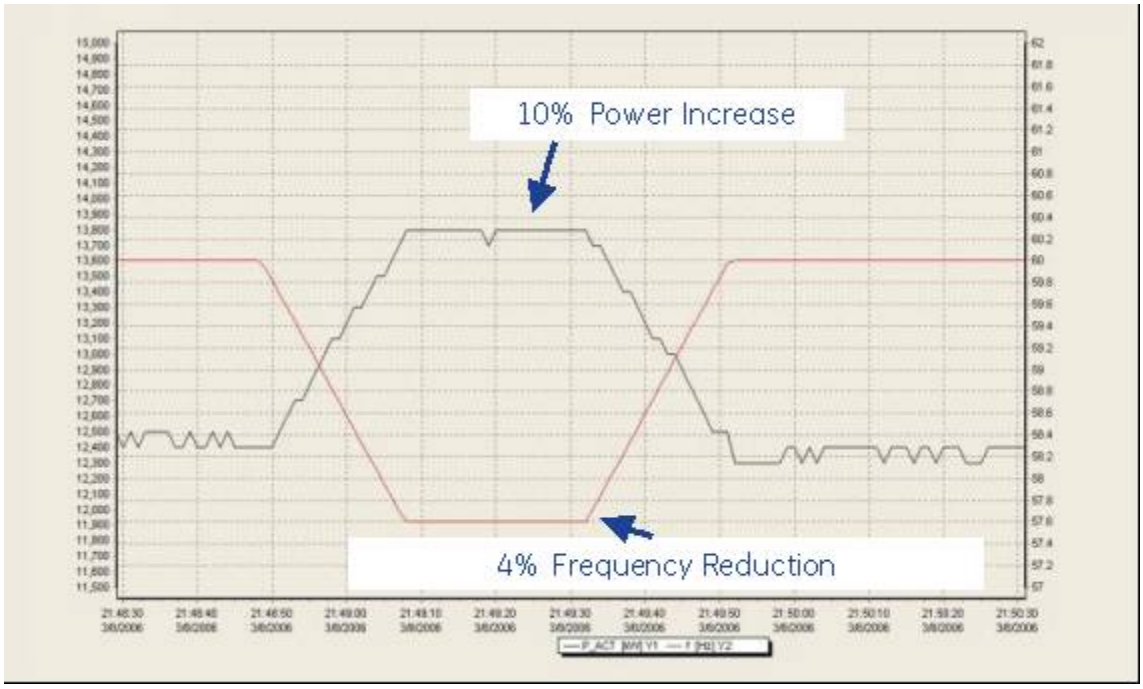

Figure 24: Power response of plant to underfrequency condition

3.4.4.4. Inertial Response

Large interconnected systems generally have large aggregate inertia, which results in small frequency deviations in response to system disturbances. Small isolated systems have much smaller aggregate inertia, and as a result, experience larger frequency deviations when disturbances occur.

The lower the system inertia, the faster the frequency will change and the larger the deviation will be if a variation in load or generation occurs. Thus, the response of bulk power systems to system disturbances is of great concern to those responsible for grid planning and operations. System events that include loss of generation normally result in transient depressions of system frequency. The rate of frequency decline, the depth of the frequency excursion, and time required for system frequency to return to normal are all critical bulk power system performance metrics that are affected by the dynamic characteristics of generation connected to the grid.

As the share of wind power in the system increases, the effective inertia of the system will decrease considering the existing technologies. While conventional synchronous generators inherently add inertia to the system, it is not necessarily the case with wind turbines generators.

In the case of induction machines and the truly synchronous machines, there is a direct connection between the power system and the machine. When there is frequency decay on the power system, the induction machine will increase its output temporarily because of the slip change. The induction machines are then able to contribute to some extent to system inertia while the truly synchronous machines will inherently add inertia to the system the same way a hydro or thermal turbine would [1].

The basic design of converter based technology (Type 3 and 4), however, does not include any inertial response unless explicitly designed to do so. The DFAG and full converter generators employ a back-to-back converter to connect to the power system. For the DFAG design, there is a direct connection between the system and the stator while the rotor is decoupled from the system by the ac\dc\ac converter. It is possible to take advantage of this direct coupling between the frequency of the system and the stator with appropriate control so that a frequency deviation on the power system varies the electromagnetic torque of the DFAG, resulting in a change of its rotational speed and thus modify active power (MW) acting as an inertial response. In the case of the full converter generators, they are completely decoupled from the frequency of the system. A change in the system frequency will not have any effect on the machine. Therefore, the full convertor generators will not by their design contribute to system inertia when there is a frequency deviation on the power system.

Inertial response capability for wind turbines, similar to that of conventional synchronous generators for large under-frequency grid events, is now available from some OEMs. This is new and is not widely recognized or used by the industry yet.

For large under frequency events, the inertial control increases the power output of the wind turbine in the range of 5% to 10% of the rated turbine power. The duration of the power increase is on the order of several seconds. This inertial response is essentially energy neutral. Below rated wind, stored kinetic energy from the turbine-generator rotors is temporarily donated to the grid, but is recovered later. At higher wind speeds, it is possible to increase the captured wind power, using pitch control, to temporarily exceed the steady-state rating of the turbine. Under these conditions, the decline in rotor speed is less and the energy recovery is minimal.

The control utilizes the kinetic energy stored in the rotor to provide an increase in power only when needed. Hence, this feature does not adversely impact annual energy production.

Unlike the inherent response of synchronous machines, inertial WTG response is dependent on active controls and can be tailored, within limits, to the needs of the power system. Further, the response is shared with controlled variations in active power necessary to manage the turbine speed and mechanical stresses. These stress management controls take priority over inertial control. Turbulence may mask the response for individual turbines at any instant in time, but overall plant response will be additive. GE's inertial control design has sufficient margin over the turbine operating range to meet the equivalent energy (kW-sec) contribution of a synchronous machine with 3.5 sec pu inertia for the initial 10 seconds. This inertia constant is

representative of large thermal generation, and is the target inertia included in the Hydro-Québec grid code [18] provision for inertial response.

Hydro-Québec requires that wind plants be able to contribute to reducing large (> 0.5 Hz), short-term (< 10 s) frequency deviations on the power system, as does the inertial response of a conventional synchronous generator whose inertia constant (H) equals 3.5 s. This target is met, for instance, when the system dynamically varies the real power by about 5 % for 10 seconds when a large, short-duration frequency deviation occurs on the power system [7]. It requires that the frequency control is available permanently, i.e. not limited to critical moments. In 2010, Hydro-Québec will integrate the first wind plants equipped with this feature in its network. Hydro-Québec is the only transmission owner currently requiring wind plants to contribute to frequency regulation by using the inertial response.

Given the systemic needs, and the Hydro-Québec requirement, the overall control is designed to provide similar functional response to that of a synchronous machine. Unlike the inherent response of a synchronous machine, the response is not exactly the same under all operating conditions, nor does it provide synchronizing torque. Frequency error is simply the deviation from nominal. A positive frequency error means the frequency is low and extra power is needed. The deadband suppresses response of the controller until the error exceeds a threshold. Thus, the controller only responds to large events. The continuous small perturbations in frequency that characterize normal grid operation are not passed through to the controller.

There are a number of differences between this controlled inertial response, and the inherent inertial response of a synchronous machine. First, and most important, the control is asymmetric: it only responds to low frequencies. High frequency controls are handled separately, by a different controller that can, if necessary, provide sustained response, as discussed in Section 3.4.4.2. Second, the deadband ensures that the controller only responds to large events – those for which inertial response is important to maintain grid stability, and for which seriously disruptive consequences, like under frequency load shedding (UFLS), may result. Finally, a controlled inertial response means the speed of response is a function of the control parameters. In the example shown, the response was tuned to provide good coordination not only with inertial response of other generation on the system, but with governor response of conventional generation as well. The ability to tune inertial response (including shutting it off) provides the planning engineer with an additional tool to manage system stability.

Field test results of the inertial control on a GE WTG for various wind speeds on a single wind turbine are shown in Figure 25. The field data was generated by repeated application of a frequency test signal to the control. The results, at various wind speeds, were then averaged and plotted. Below rated wind speed (<14m/s) the results clearly demonstrate the inertial response and recovery. Above rated wind speed the inertial response is sustained by extracting additional power from the available wind (i.e. short-term overload of the WTG).

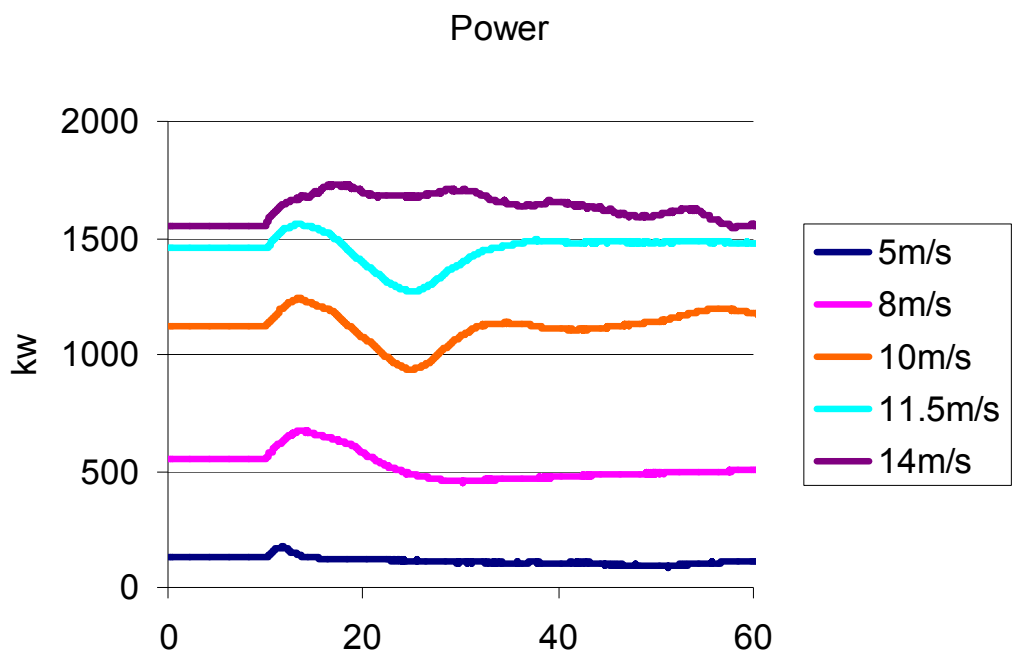

Figure 25: Field demonstration of the GE WindINERTIA™ response.

Ultimately, grid codes may be modified to include some type of inertial response requirement. The development of the GE WindINERTIA™ feature, as well as planned demonstrations by other OEMS, such as Repower (offshore wind plant in Germany in 2009: Alpha Ventus research project), shows that such functionality is, indeed, possible. However, it also shows that inertial response identical to that of synchronous generation is neither possible nor necessary. Controlled inertial response of wind plants is in some ways better than the inherent inertial response of conventional generators. Inertial response of wind generation is limited to large under-frequency events that represent reliability and continuity-of-service risks to the grid. The crafting of new grid codes should therefore proceed cautiously and focus on functional, systemic needs.

3.5. HARMONICS

Most commercially available wind turbines comply with IEEE 519, which if applied on a turbine-by-turbine basis would limit the total harmonic distortion (THD) of the current at the terminals of the machine to 5% (of rated fundamental frequency current) or less. Turbine vendors will usually note this in their product specifications.

This includes turbines in each of the four major topologies. Type III and Type IV machines utilize static power converters, but the quality of the output currents is well within the IEEE 519 limits.

ISO-NE's interest is in the harmonic performance of the entire plant, not the individual turbines. Experience from around the country shows that harmonics can be a serious concern for large wind plants, especially those employing capacitors at medium voltage for reactive power support, or plants with extensive collector networks of underground medium voltage cable. The phenomenon at issue is the interaction of the medium voltage shunt capacitance in series with

the interconnection substation transformer inductance. The combination appears as a series filter, and provides a convenient sinks for background harmonics on the transmission system (Figure 26).

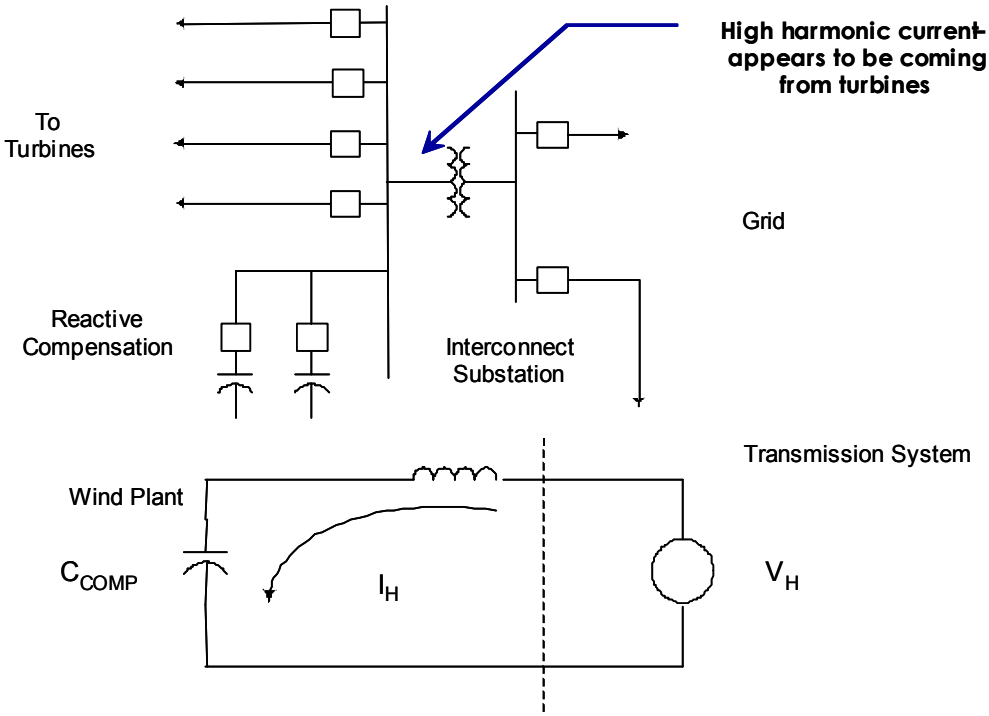

Figure 26: Equivalent circuit showing wind plant as a sink for harmonic distortion from the grid.

The concern regarding interconnection is that it may appear the plant is in violation of the IEEE 519 limits when the root cause is actually background distortion on the transmission system.

3.6. WIND PLANT MODELING

Wind turbine and wind plant modeling has been a topic of intense debate, scrutiny and development for the past several years. The availability of good simulation models for wind plants has been limited (and contentious) for a number of reasons. First and foremost, the technology has been evolving very rapidly, and it simply has not been possible for model development to keep up. It is well to remember that the suite of industry accepted models for synchronous generations (i.e. IEEE standard types) took several decades to develop. The time scale for wind is significantly less. Because wind generation technology is developing so rapidly, there are very serious intellectual property issues for the OEMs. Developing, and offering, advanced controls for wind plants are competitive issues, and consequently OEMs tend to be secretive with their technology. Further, to a large extent, there has not been a history of utility grade, standardized modeling in the industry. Some OEMs have adopted the practice of developing and providing proprietary “black box” models for their technology. While these

proprietary models may be well suited to system analysis, they become problematic in North America where data must be freely exchanged. Other OEMs (e.g. GE) have produced open structure models, which are openly documented and intended to be exchanged. These models are moderately complex, tend to be specific to the OEM's equipment, and include control features which may not be generally applicable or available on other OEM equipment.

3.6.1. WECC/IEEE Generic Models

International cooperation with generic model development initiated by the WECC provides strong support for continuation of this effort as wind generation technology continues to evolve. The need for widely available and understood models appropriate for steady-state and dynamic studies of the bulk network is not unique to North American utilities. The principal attributes of these models, non-proprietary code and parameters and well-proven behavior, also appear to be a global need. Recent discussions of this topic have been focusing on the steps beyond the initial development of the generic model architectures and the distribution of code embodying these models to a much broader audience of users. There are still questions, for example, about the appropriate use of the simplified models, as well as the converse - which studies fall outside the intended application space for the models, and how should those studies be conducted.

The WECC-led effort considered the four major types of turbines in current commercial applications. Block diagrams for each were developed to encompass the range of behavior and performance across the major commercially-available turbines. However, as capabilities and features are added to the existing fleet of commercial turbines, augmentation of the structures for the generic models may be necessary. In addition, there is the possibility of new wind turbine topologies, as exemplified by the synchronous machine-based turbines now on the market.

In the very near term, the industry must develop accurate representations of existing turbine designs using the current generic structures. This effort will require significant collaboration between the power engineering community and the wind turbine vendors, since the measurement data or detailed simulation results that provide the best opportunities for checking the behavior and adjusting the parameters of the generic models are held by the vendors and not generally available publicly. With the growing number of commercial turbines either in service or on the market, this initial validation process will be a very significant effort.

At present, it is recognized that existing NERC standards are not being applied consistently or uniformly for wind generation. Standards MOD-011 and MOD-012, for example, mandate that reliability organizations provide guidance and requirements for power flow and dynamic models. Given the lack of accepted industry standard models for wind turbines and wind plants, enforcement here has been very difficult. The current situation, with system impact studies based on one-of-a-kind, user-written, or proprietary models, is not tenable in the long term, and has actually become a significant limitation with the current installed wind generation capacity. Development of models is critical in this respect.

Existing NERC modeling standards require Reliability Entities (RE) to develop comprehensive steady-state data requirements and reporting procedures needed to model and analyze the steady-state and dynamic performance of the power system (MOD-011 and MOD-013). Equipment owners are required to provide models to the RE steady state and dynamic models

(MOD-012). This information is required to build a reasonable representation of the interconnection's system for planning purposes, as stated in MOD-014 and MOD-015. In this context, proprietary or user-written models are generally unacceptable. In lieu of the accepted standard models, the common course of action for wind plant owners has been to provide no models at all, which is contrary to the requirement of these standards.

Finally, there are NERC standards that deal with periodic verification of the models, such as MOD-023, which deals with verification of reactive power limits. Again, with the current process broken because of the lack of accepted models, this provision has in essence been ignored for existing wind plants. These same issues are being dealt with in other jurisdictions around the world experiencing rapid development of wind power. The process which has been adopted by National Grid in the UK in this regard is of particular interest, and can be found in a document titled "Guidance Notes for Power Park Developers: Grid Code Connection Conditions Compliance: Testing & Submission of the Compliance Report", dealing with the full scope of grid code compliance testing and model validation. It may be found at:

http://www.nationalgrid.com/NR/rdonlyres/5F1F5F26-FD98-475A-A1EA-C7584FC5C4F7/15040/GuidanceNotesPowerParksRev16.pdf

Much of the current modeling activity surrounds representations of wind turbine technologies and wind plants for positive-sequence analyses, primarily power flow and dynamic simulation. As wind penetration continues to grow, there is a growing realization that other studies and evaluations are needed in the plant design and commissioning process, for some of which the positive sequence steady-state or dynamic representations are inadequate. At present, these studies are generally conducted with a simulation platform for which a relatively detailed transient model of the wind turbine and controls already exists or can be created.

3.6.2. Model data reporting requirements for turbine manufacturers

NERC is in the position to be able to force clarity upon most of the modeling issues that have challenged both transmission planners and wind plant operators. NERC can and should play a significant role in encouraging model development activities being pursued in WECC and IEEE. NERC should clearly re-state the expectation that wind generators comply with the intent of existing standards to the maximum extent possible, recognizing that there are differences that need to be addressed going forward, but setting a fixed timetable for resolution of those differences. In summary, steps that could be taken in this regard include:

1. Clarification of the expectation that wind generators must comply with standards, and a fixed timetable for compliance, with penalties for non-compliance;
2. An assessment of existing standards to determine what modifications to standards (if any) are necessary in consideration of wind generation, especially in the modeling area and including verification of models, given the somewhat unique aspects of wind generation;
3. Definition of appropriate tests for wind plants that considers the unique operational nature; verification of reactive limits for operating plants is an example, where the existing procedure may have to be modified to account for the operational characteristics.

The transition of the generic modeling activity from WECC to the IEEE Power Engineering Society Power System Dynamics Committee should provide a broader forum going forward for the needed work in this area.

3.6.3. Short Circuit Modeling

The short circuit behavior of wind generation with power electronics (type 3 and type 4) is different than that of synchronous generators. Further, the details of the behavior are relatively complex and specific to each wind generator OEM. Most short circuit modeling programs have limited ability to accommodate such non-standard behavior. Consequently, present practice tends to use modeling assumptions that are intended to be conservative. This usually means modeling with equivalent impedances that tend to over state the amount of fault current delivered in the short term. This practice has, so far, generally served the industry satisfactorily. It is anticipated that this issue will continue to receive attention and that modeling will become more sophisticated with time.

This is a challenging topic and the industry is presently developing understanding, processes and recommendations related to short circuit currents. The IEEE PES task force on Short Circuit Fault Contribution from Wind Generators is addressing this issue. It is recommended that ISO-NE track the progress of that task force and evaluate the results of its work. It is possible that this task force will recommend a practice whereby wind plant owners would provide short circuit information to transmission owners, grid operators, and others who need such data.

3.6.4. Transient (point-on-wave) Models

The individual phase transient (e.g. EMTP-like) modeling of wind generation is highly complex. The behavior the power electronics and electromagnetics of wind generators is extremely specific to individual OEMs. Correct modeling absolutely requires access to highly proprietary information about the equipment. Further results are not easy to interpret. Overall, this type of modeling is usually unnecessary for phenomena outside of the wind plant and is to be avoided, if possible. Use of generic point-on-wave models that purport to represent actual wind turbine generators is almost invariably meaningless. Performance is design specific.

In spite of this, situations may arise where detailed modeling and simulation studies may be required. In such circumstances, it is critical to first secure the direct participation of the vendors of the equipment involved (e.g. HVDC converter and wind turbine manufacturer) to support if not conduct the necessary investigation. Results of detailed simulation studies by third parties alone may be absolutely correct given the fidelity of the equipment models used, but could likely miss the major points entirely if those models are generic and not reflective of the actual OEM equipment.

3.7. DISTRIBUTION CONNECTED WIND GENERATION

Distribution connected wind generation has a number of performance and economic aspects which require separate consideration and different interconnection requirements. In general, distribution connected wind turbines come in single or small groups of turbines. To date, unlike Europe, distribution connected wind generation represents a small fraction of the total wind generation installed in the US. For this reason, the most serious issues related to distribution

connected wind generation have tended to be local power system concerns, not broad systemic operational problem.

The economics of distribution systems make imposition of extensive monitoring and control requirements an unnecessary burden. Many grid codes exempt wind plants of sizes less than 10 MW from many of the requirements imposed on larger, transmission connected plants. ISO-NE should adopt this stance as well.

However, some requirements are needed to assure acceptable performance of the local grid and to allow ISO-NE to incorporate substantial amounts of distribution connected wind, should that scenario evolve. ISO-NE should make a distinction between small, behind-the-meter, wind turbines and installations that connect one or more turbines directly to the grid at distribution level. The exact breakpoint in size can be set by ISO-NE. It is recommended that "small" be defined in the range of less than 100 to 250kW. Small, behind the meter, wind turbines can be handled with existing customer generation connection rules. Installations that are larger than "small", but lower in rating than a minimum, for which the recommendations above (and ISO-NE's LGIA) apply, can be termed "medium" for this discussion. The exact size range for "medium" plants should be determined by ISO-NE. The following discussion is focused on issues that accompany these medium size installations when they are connected to distribution systems.

From a control perspective there are number of differences that must be considered. Distribution connected generation, including wind turbines, are subject to IEEE standard 1547. This means that wind turbines must NOT have any of the fault ride-through capabilities described in section 3.2. Wind turbines must trip for significant voltage and frequency events. This requirement may have unfortunate systemic implications should New England reach high levels of distributed wind generation. NERC activities, including efforts by the Integrating Variable Generation Task Force, are currently underway to address this apparent incompatibility.

Another aspect of IEEE 1547 is that distributed generation must NOT regulate voltage. Thus, distribution connected wind generation should be on power factor control. Independent of IEEE 1547, this practice has merit, in that most distribution system voltage management equipment (including switched capacitors, step regulators, etc.) has the potential to misbehave (i.e. hunt or cause unexpectedly high or low voltages) when uncoordinated voltage control is applied downstream on a feeder. In any event, minimizing voltage fluctuations due to active power variations (from, for example wind speed variations) by manipulating reactive power has limited efficacy in low X/R systems, such as would be found in most distribution systems [17].

The discussion of islanding provided in section 3.2.6 applies for distributed generation. Specifically, islanding is prohibited. This includes temporary islanding associated with reclosing. Wind turbines on distribution system should be actively tripped, by transfer trip or some equivalent, when the distribution feeder breaker is to be opened. If reclosing is practiced, the wind turbine must be tripped before the recloser action.

Good engineering practice should be respected in adding wind generation to distribution systems. Feeder protection and breaker rating should be reviewed for adequacy with distributed generation added.

Some information and control of distributed wind generation is, however, appropriate and necessary. Distributed wind generation must have the ability to be shut down by the system operator. Distributed wind generation should provide status information, including whether or how many machines are running, power production, and anemometry.

3.8. REFERENCES

[1] "Interconnection for Wind Energy", U.S. Federal Regulatory Commission, Order 661-A, December 12, 2005, Available http://www.ferc.gov.

[2] "Grid Code, High and Extra-High Voltage", E.ON Netz GmbH, Bayreuth, Germany, April 1, 2006.

[3] FRCC Event Analysis Team (FEAT) Interim Recommendations Report, http://www.balch.com/files/upload/FRCC_Interim_Report_6_3_08.pdf

[4] Cardinal, M.E; N.W. Miller, "Grid Friendly Wind Plant Controls: WindCONTROL – Field Test Results"; proceedings WindPower 2006, Pittsburgh, PA.

[5] Kundar, P., Power System Stability and Control, 1994, McGraw-Hill, Inc., New York, ISBN 0-07-035958-X.

[6] Hingorani, Narain G.; Laszlo Gyugyi and Mohamed E El-Hawary, "Understanding FACTS: Concepts and Technology of Flexible AC Transmission Systems," New Delhi: Standard Publishers, 2001. xix, 432p. ISBN: 81-86308-79-

[7] [Ackermann, Thomas, "Wind Power in Power Systems", Wiley; Sussex, UK, 2005.

[8] ["Voltage Stability Assessment, Concepts, Practices and Tools," IEEE PES WG Publication, 2005.

[9] "Appendix G. Interconnection Requirements For A Wind Generating Plant", FERC, http://www.ferc.gov/industries/electric/indus-act/gi/wind/appendix-G-lgia.doc

[10] "PRC-024-WECC-1-CR – Generator Low Voltage Ride-Through Criterion," WECC, http://www.wecc.biz/documents/library/Standards/2008/WECC_Low_Voltage_Criterion_2-12-08_clean.pdf

[11] Erlich, W. Winter, A. Dittrich, Advanced Grid Requirements for the Integration of Wind Turbines into the German Transmission System, IEEE Power Engineering Society General Meeting, 2006

[12] J. Matevosyan, T. Ackermann, S. Bolik, L. Söder, Comparison of International Regulations for Connection of Wind Turbines to the Network, Technical Paper Presented At The Nordic Wind Power Conference, 1-2 March, 2004, Chalmers University Of Technology

I. Garin, A. Munduate, S. Alepuz, J. Bordonau, Low and Medium Voltage Wind Energy Conversion Systems: Generator Overview and Grid Connection Requirements, C I R E D 19th International Conference on Electricity Distribution, Vienna, 21-24 May 2007

[13] EirGrid Grid Code, Version 3.1, May 2008

[14] THE GRID CODE, Issue 3, Revision 33, 16th March 2009, National Grid Electricity Transmission plc

[15] IEEE Std. 1547-2003 “Standards for Interconnection Distributed Resources with Power Systems”

[16] Alberta Electric Power System (AESO) , Wind Power Facility - Guide to the Technical Requirements

[17] R. A. Walling, N. W. Miller, J. J. Sanchez-Gasca, “ADVANCED CONTROLS FOR MITIGATION OF FLICKER USING DOUBLY-FED ASYNCHRONOUS WIND TURBINE-GENERATORS”, C I R E D 18th International Conference on Electricity Distribution, Turin, 6 -9 June 2005

[18] Hydro Quebec Grid Code; “Transmission provider technical requirements for the connection of power plants to the Hydro Quebec transmission system”. March 2006

Section 4
WIND GENERATION FORECASTING

4.1. THE NEED FOR RELIABLE FORECASTS

The variability of wind energy production presents a special challenge for utility system operations. While conventional power plants can produce a near constant output – barring rare emergency outages – the output of a wind plant fluctuates. In some parts of the U.S., such fluctuations can amount to several hundred megawatts in a matter of an hour or two. To the extent the fluctuations are not predicted, and to the extent that these fluctuations do not match with the balancing area load pattern, they create costs for the electricity system and consumers as well as potential risks to the reliability of electricity supply.

One of the principal mechanisms a grid operator, such as an Independent System Operator (ISO), uses to limit unexpected changes in plant output is to charge suppliers a penalty for "uninstructed deviations" between their forward schedules (i.e. predicted output) and actual generation. This policy encourages suppliers to maintain a high level of reliability while also compensating the system for the costs of having either excess or insufficient generation. Typically, the penalty is designed to motivate good behavior (like a speeding ticket) and is not assessed on the deviation in each hour based on the market-clearing price of the real time market. However, considering the volatility of wind plant output and the fact that the variability is not under the wind plant operator's control, some grid operators recognize that wind energy suppliers could be severely penalized if required to pay for deviations on an hourly basis.

The performance requirements for a forecasting service are dictated by the needs of both the grid operator and the wind generators. From the perspective of wind generators, the priority is to minimize the deviation between forecasted and actual plant output. For an ISO, there are two additional and more demanding priorities.

As with load, effective power production planning requires more accurate forecasts for the aggregate system rather than single plants. Thus, the first priority of power production forecasting systems is to anticipate changes in aggregate wind production as accurately as possible in the very short term (up to a few hours ahead) so the ISO can manage its grid operations and reserve capacity purchase decisions in an optimal fashion. For this purpose, it is natural to consider persistence-type methods. Persistence assumes the current conditions will not change and can be used to forecast the future conditions. If persistence is used to forecast for periods longer than an hour, a diurnal change is typically taken into account. Often, autoregressive statistical techniques, which are designed to forecast from time series data, are combined with the persistence techniques to produce the forecast. For example, a next-day hourly forecast would assume that conditions would be the same as the previous 24 hours.

However, such methods are inherently limited in that they cannot predict changes in plant output that depart radically from recent trends that might occur because of a passing weather front. In order to achieve the highest possible accuracy, the methods should incorporate other data that may signal future trends, such as conventional weather forecasts or meteorological observations from upstream of the wind plants.

The second priority is to forecast the wind generation for the next day so an ISO can schedule reserve capacity and unit commitment as efficiently as possible. In this case, it is less important to accurately forecast the *timing* of changes in wind generation than it is to forecast the *minimum* wind plant output during the peak load hours.

In general, a high degree of reliability and accuracy is required by ISOs and utility systems for aggregate wind generation forecasts. This requirement is consistent with the usual high standard of reliability applied to all utility system operations. It is particularly important for the next-hour forecasts, because their accuracy declines relatively quickly the older the forecast becomes. The accuracy of next-day forecasts, in contrast, is not as sensitive to the age of the forecast.

4.2. THE FORECASTING PROBLEM

The wind energy generation forecasting problem is closely linked to the problem of forecasting the variation of specific atmospheric variables (i.e. wind speed and direction, air density) over short time intervals and small spatial scales. In general, this problem is enormously challenging due to the wide variety of spatial and temporal scales of atmospheric motion that play a role in determining the variation of the key parameters within the targeted forecast volume. In order to understand the different issues involved in wind energy forecasting, it is useful to divide the problem into three time scales:

- very short-term (0-6 hours),
- short-term (6-72 hours), and
- medium range (3-10 days).

The skill in very short-term forecasting is related to the prediction of small-scale atmospheric features (< 200 km in size) in the vicinity of the wind plant. The major issue is that very little data are typically gathered on the scale of these features. As a result, it is usually difficult to define their spatial structure and extent of these features. One viable option is often to infer information about these features using a time series of meteorological and generation data from the wind plant. For this reason, real-time data from the wind plant is usually crucial to producing highly accurate very short-term forecasts. In fact, the 0- to 6-hour time scale has been defined as the period when persistence forecasts will typically outperform wind energy forecasts derived solely from predictions of the regional atmospheric circulation. Thus, the benchmark for the very short-term time scale is a persistence forecast.

The ability to forecast the wind energy generation over short-term time scales is tied to the skill of forecasting regional scale atmospheric features. These features are often referred to as synoptic scale weather systems and are the ones typically depicted in newspaper and TV weather presentations. It is necessary to gather data over a large volume of the atmosphere in

order to define the structure of these systems. This process is usually accomplished using in situ or remote sensing measurement devices operated by an agency of a national government (such as the U.S. National Weather Service).

The importance of measurements at the wind plant drastically decreases at the start of this 6-72 hour period. The real-time plant data is able to make some contribution to forecast quality at the start of the period. However, it has little predictive value after about 12 to 18 hours. This is fundamentally because information that determines variations in meteorological parameters for periods greater than 12 hours comes from locations that are hundreds of kilometers away. As a result, the forecast standard shifts from persistence to climatology (i.e. the average conditions for that location and season) during this period. A climatology forecast will typically outperform a persistence forecast for most locations after about 12 to 18 hours.

The skill of medium range forecasts is typically linked with forecasting continental, hemispheric, and global-scale atmospheric circulation systems. However, the regional and local features are superimposed upon these large scale features. At the medium range time scale, it is difficult to accurately predict the evolution of specific local-area or regional features that will affect the forecast target area. Therefore, most of the forecast skill is linked to prediction of general patterns that favor above average or below average winds for a substantial period of time (a day or more). The benchmark for this time scale is a climatological forecast.

It should be noted that the distribution of atmospheric energy across the space and time scales varies substantially by region, season, and atmospheric regime. This variability has important implications for predictability and forecast performance. If there is limited variability over a specific time scale, the absolute forecast performance is likely to be good but with little skill over a simple persistence or climatology forecast. Conversely, a situation with large variability over a given time scale will often result in lower absolute performance but higher relative performance compared with simple persistence or climatology forecasts.

The impact of the various errors ultimately affects the forecast wind speed and the timing of significant changes in wind speed. Both statistical techniques and ensemble forecasting can mitigate such errors. These methods are described in the next section.

4.3. FORECASTING COMPONENTS

There are two fundamental components in the forecasting process, namely, data gathering and processing. Data gathering is performed using a wide range of measuring devices at local, regional, and even the global scales. Data processing transforms measurement data into a forecast for the desired period of time. The tools used for data processing include physical and statistical atmospheric models as well as those describing the relationship between meteorological conditions within the wind plant and plant output (usually referred to as plant output models).

4.3.1. Data Gathering

Due to the wide range of spatial and temporal scales that determine the variations in the wind power generation, it is necessary to use a diverse mix of data sources to achieve the best possible forecast performance. For wind energy forecasting, the most fundamental type of data is the time series of meteorological parameters and power generation from the wind plant itself.

The power generation data can be for the entire plant or for groups of turbines within the plant. The meteorological data typically consist of wind speed and direction and sometimes temperature, pressure, and even humidity data from sensors on one or more meteorological (met) structures that may be towers or masts within the plant boundaries. These data are typically gathered at the hub height of the turbines. The additional details provided from generation data by turbine group and multiple met towers (or masts) can be very beneficial in developing a more accurate relationship between the meteorological conditions and plant output. The availability of this time series data alone is sufficient to make a somewhat skillful very short-term forecast and at least a climatology-level forecast for the short-term and medium range forecast.

In order to achieve a higher level of forecast skill, it is necessary to utilize data from beyond the plant's boundaries. Meteorological observations from in situ sensors deployed and operated by government agencies have been a traditional source of data for wind energy forecasting. These include sensors on surface-based met towers deployed mostly at airports and sensors carried aloft by weather balloons to provide information about the vertical profile of temperature, humidity, winds, and pressure. The main problem with these data is that the spacing between measurements is too large (because of economic constraints) to adequately represent the small or even sometimes medium scale atmospheric features that are responsible for short-term variations in wind energy output. However, these in situ sensor networks do a better job of mapping most of the features that are responsible for the variability over 1- to 2-day ahead time scales. Unfortunately, there are large areas (such as the oceans) where very little in situ data are gathered due to the cost of maintaining such systems in those environments. Therefore, data coverage is not uniform, which sometimes results in poor forecast performance in certain areas such as the west coast of the United States. Forecast performance is often worse there than in the eastern part of the U.S. because a large data sparse region (i.e. the Pacific Ocean) is located in the most frequent upstream direction (to the west) of this area.

The expectation is that remote sensing technology will eventually overcome these limitations of data resolution and coverage. Many types of atmospheric remote sensors have been developed and some have been deployed for operational use. These include Doppler radars, wind profilers (a type of fixed position vertically-pointing Doppler radar), lidars, sodars, and satellite-based radiometers. While all of these technologies have made contributions to the atmospheric forecasting process, each has significant limitations that have impeded their enhancement of atmospheric forecast performance. However, remote sensing technology continues to move forward rapidly and there is still an expectation that the next generation of remote sensors deployed in a few years will have a greater impact on forecast performance.

4.3.2. Data Processing

Data processing is the other major component of the forecast process that is typically performed using mathematical (often called numerical) models to ingest data and generate predictions. There are four fundamental categories of data processing models used in the wind energy forecasting process:

- physical atmospheric,
- statistical atmospheric,

- wind plant output, and
- forecast ensemble models.

There are many types of models within each of these four categories. A particular forecast system may employ one or more types of models.

4.3.3. Physical Atmospheric Models

Physical atmospheric models are based upon the fundamental physical principles of conservation of mass, momentum, and energy as well as the equation of state for air. These models are actually a type of computational fluid dynamic model that has been specially adapted to simulate the atmosphere. They consist of a set of differential equations that are numerically solved on a three-dimensional data grid that has a finite resolution (i.e. the spacing between grid cells). There are many types of models based on the same basic physical principles but differing in how the grids are structured, how the equations are solved numerically, and how sub-grid scale processes are represented (e.g. cloud physics occurring on scales smaller than the grid cells).

Physics-based atmospheric models fall into two broad categories: *prognostic* and *diagnostic*. Prognostic models are formulated to step forward from an initial state and make predictions of the future state of the atmosphere. It is necessary to specify an initial state to start this forecast process. An initial state consists of a value for each model variable at each grid cell that is produced by processing all available raw atmospheric data from the various sensor systems described earlier. There are many three-dimensional prognostic atmospheric models in use. These include the Mesoscale Atmospheric Simulation System model developed by MESO, Inc. and the Weather and Research Forecast model developed by the National Center for Atmospheric Research (NCAR).

Diagnostic models use a similar but often simplified set of physical equations to estimate the values of variables at locations where there are no data from locations where data are available. These models can be used to add more resolution to forecast simulations made with a prognostic model at a lower computational cost than reducing the size of the grid cells of the prognostic models. The simplifying assumptions used to create the diagnostic model will typically limit its performance compared with a prognostic model run at a similar resolution.

4.3.4. Statistical Atmospheric Models

Statistical atmospheric models are simply statistical techniques used for atmospheric applications. They are “atmospheric” models in the sense that atmospheric data are used as input and the output is an atmospheric variable or quantity that is linked to an atmospheric variable (such as wind energy output). Statistical models operate by creating a set of empirical equations from a sample of predictor and predictand data called a “training sample.” The form of the equations is dependent on the type of model used. Typically, the equations have numerical coefficients that must be determined.

A statistical modeling procedure uses an optimization scheme to select the coefficient values that yield the “best” relationship between the predictors and the predictand. The meaning of “best” in this context depends upon what optimization criteria are employed. An example of optimization criteria is the lowest mean absolute error or the lowest mean squared error. Once

the coefficients are determined from the training sample, the resulting equations can be used to produce a forecast by inserting the current values of the predictors and calculating the value of the predictand. There are an enormous number of statistical models available for this type of application. The most popular ones for atmospheric science applications appear to be multiple linear regression and neural networks.

Statistical models are used in a number of different ways in wind energy forecast systems. In one mode, they can be used to adjust the predictions from the physics-based models. This mode is commonly called Model Output Statistics (MOS). However, they also can be used to make predictions directly from measured data. For example, a time series of power generation data can be used to train a statistical model and make predictions of future generation. In the very short term, statistical models are often used to combine persistence and physical model data.

4.3.5. Wind Plant Output Models

Wind plant output models characterize the relationships between the meteorological variables at the wind plant site and the plant's energy output. They can be formulated as statistical models, physical models, or a hybrid of both types. In a statistical approach, the parameters measured by sensors on the plant met towers or masts typically serve as the predictors and the power generation is the predictand. The simplest plant output model is a relationship between the wind speed measured at a met tower and the total plant output. The result is a plant-scale equivalent to the "power curve" for an individual turbine. This simple model can be extended by developing a separate relationship for ranges of wind directions. This relationship may be useful in accounting for the orientation of the turbine layout relative to the wind direction. For example, the power production may be different when the wind blows *along* versus *across* a row of turbines.

In a physical approach to a wind plant output model, the variations in wind flow within the wind plant, the interaction of the wind with the turbines, and the effect of turbine wakes on other turbines are explicitly modeled. This approach requires detailed information about the layout of turbines in the plant, the properties of the earth's surface (terrain, roughness, etc.) within the plant, and information about the turbine specifications. The physical models have the advantage of being able to produce a power generation forecast without a training sample. They can also explicitly account for changes in the operating structure of a plant, such as turbines out of service, as well as plant-scale variation in wind and its impact on power production. However, these models are typically much more complex than statistical models and require detailed data about the plant that may not be readily available. As with almost all physical models, there are likely to be systematic errors in the forecasts due to simplifying assumptions included in the physics, limited resolution, or the inaccuracies in the input data. In most applications, it is necessary to use a statistical model to adjust the forecasts of a physical plant output model to remove these systematic errors.

The typical use of plant output models in the forecast process is to convert wind speed predictions for one or more met towers or masts to power generation forecasts for the plant. However, it is not necessary to have an explicit wind plant output model in a forecast system since it is possible to go directly from external predictors to a power output forecast through the use of an atmospheric statistical model.

4.3.6. Forecast Ensemble Models

Forecast ensemble models are statistical models that produce an optimal forecast by compositing forecasts from a number of different techniques. The use of forecast ensemble models is based on research demonstrating that a composite of forecasts from an appropriate ensemble is often superior to those produced by any one member of the ensemble. The method is depicted schematically in Figure 27.

The fundamental concept is that if errors in the forecasts produced by the different methods are unbiased and have a low degree of correlation with one another, random errors from individual forecasts will tend to offset each other and result in a composite forecast with lower error than any individual forecast. If all input forecasts are highly correlated, the impact of ensembling will be minimal. This result implies that the underlying forecast methods must produce relatively small, random errors and be different in how they construct relationships between raw observational data and forecasts or the type/amount of input data must be significantly different. This "ensemble effect" is a well-known technique used by meteorologists in short and medium range forecasting. The spread of the ensemble forecasts can characterize forecast uncertainty if differences in the ensemble members are the primary factors that introduce the uncertainty.

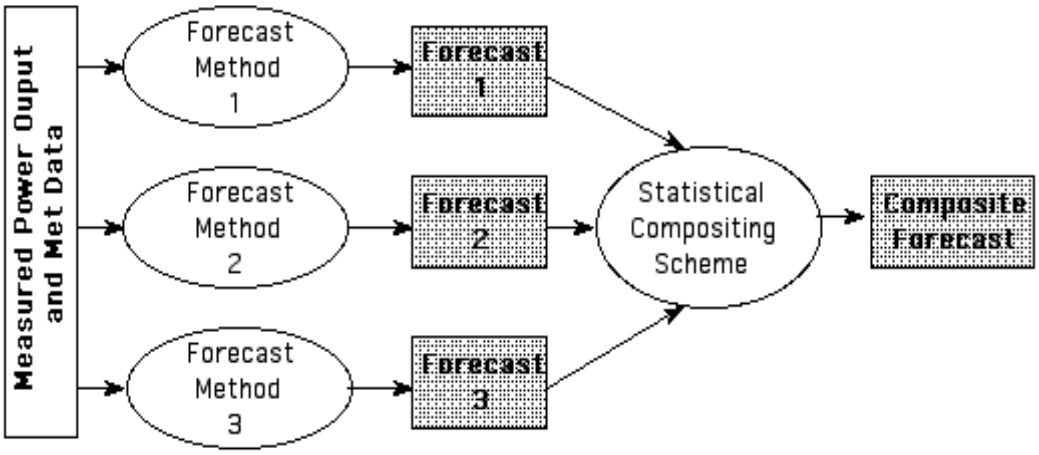

Figure 27: A schematic depiction of the ensemble technique. This arrangement applies to very short-term, short-term and next-day forecasts.

There are two fundamental strategies that can be used to generate an ensemble of forecasts. One strategy is to use the same forecast model and vary the input data within their range of uncertainty. The other is to use the same input data and to employ different forecast models or different configurations of the same model. The relative value of either strategy depends upon the sources of uncertainty in the forecast procedure including sensitivity of the models to initial conditions. In practice, the sources of uncertainty vary with location, season, and other factors. Thus, the choice of the ensemble components and the number of members must be determined from experience and experimentation.

This brief overview of forecast components indicates that there is a large and diverse pool of tools that can be used to generate wind energy forecasts. The challenge is to select the optimal

set of tools and configurations for a specific forecast application. There is not one accepted set of specific forecasting methodologies and tools. However, a quality system should combine the strengths of physical, statistical, and ensemble techniques.

4.4. FORECAST EVALUATION

Although it may seem straightforward, there are a number of complex issues associated with the evaluation of wind energy forecasts. The most significant issue is which parameter(s) should be used as the metric(s) for forecast performance. The choice of metrics can have a significant impact on characterizing forecast performance.

A wide variety of metrics is in common use and no doubt many more could be devised. One fundamental distinction is *absolute* versus *relative* performance. An absolute metric provides a measure of the performance of a forecast system that is independent of other forecasts. Examples of absolute performance metrics are root mean square error (RMSE), mean absolute error (MAE) and median error (MDE). A relative performance metric is a measure of the performance of a forecast method relative to another method. Typically the other method is a reference forecast, such as persistence or climatology. A popular relative metric is the persistence-based skill score, which is the percentage reduction in the MAE of a persistence forecast that is achieved by a particular forecast method.

Another distinction in selecting parameters is the sensitivity to different portions of the error frequency distribution. Some parameters are much more sensitive to outliers, i.e. forecasts with anomalously large or small errors. For example, the RMSE is quite sensitive to outliers while the MDE is not. The sensitivity of the MAE parameter is between these two extremes.

In addition to the issue of different metrics providing a different picture of performance, there is also the issue that a forecast system can be tuned to produce better performance for a specific metric while possibly degrading the performance for other metrics. This tuning can be done by formulating a statistical technique to minimize the value of a specified optimization or cost function. Such an approach might be used to customize the forecast system to meet the needs of a specific application. However, the underlying issue is whether the evaluation metric is really linked to the user cost function. If it is, then it probably makes sense to optimize the forecast system for that metric.

An example of the wide range of perspectives provided by different forecast metrics is provided in Table 1. This table lists the values for a suite of forecast metrics for the performance of 1- to 48-hour forecasts of power output and wind speed during the month of October 2001 for a wind plant in the San Gorgonio Pass of California. Different pictures of the absolute and relative forecast performance emerge depending on which metrics are considered. For example, MAE as percentage of the rated capacity is 14.7% for the first 24-hour period. However, the RMSE is 20.8% and the MDE is 10.3%.

Table 1: Power output and wind speed verification statistics for a wind plant in the San Gorgonio Pass of Southern California.

Verification Statistic	Power Output					
	Month:	Oct-01			% Capacity	31.6%
	Hours 1-24			Hours 25-48		
	eWind	Persistence	Climatology	eWind	Persistence	Climatology
MAE %Rated	14.7%	22.3%	28.4%	16.0%	32.4%	28.4%
MAE %Mean	46.4%	70.5%	89.7%	50.5%	102.6%	88.5%
MAE % Std Dev	47.7%	72.4%	92.2%	51.9%	105.5%	90.9%
RMSE-% Rated	20.8%	31.0%	31.9%	22.9%	42.1%	31.6%
Median % Rated	10.3%	16.7%	28.4%	10.9%	27.3%	28.3%
Correlation	0.75	0.47	0.11	0.63	0.00	0.11
Skill-Pers	34.1%	0.0%	-27.3%	50.8%	0.0%	13.8%
Skill-Climate	48.3%	21.5%	0.0%	43.0%	-16.0%	0.0%
Verification Statistic	**Wind Speed - Met Tower**					
	Month:	Oct-01			Avg Spd (m/s)	8.83
	Hours 1-24			Hours 25-48		
	eWind	Persistence	Climatology	eWind	Persistence	Climatology
MAE	2.52	3.87	3.86	2.70	5.59	3.86
MAE %Mean	28.5%	43.8%	43.7%	30.5%	63.3%	43.7%
MAE % Std Dev	55.8%	85.8%	86.6%	59.8%	123.9%	85.5%
RMSE	3.13	4.90	4.62	3.58	6.91	4.59
Median	2.10	3.10	3.82	2.00	4.70	3.80
Correlation	0.72	0.51	0.04	0.63	-0.07	0.04
Skill-Pers	35.0%	0.0%	0.4%	51.8%	0.0%	31.0%
Skill-Climate	34.8%	-0.4%	0.0%	30.1%	-44.9%	0.0%

4.5. STATE-OF-THE-ART FORECASTING

The current state-of-the-art forecasting techniques exhibit considerable skill in both very short-term and short-term forecasting. Very short-term (0-6 hrs) hourly forecasts typically outperform a persistence forecast by 10% to 30%. Short-term (1- to 2-day) hourly forecasts usually outperform persistence and climatology by 30% to 50%. At present, medium range (3-10 day) forecasts of the hourly wind energy production typically do not outperform climatology and hence have limited usefulness. However, medium range forecasts of the *average* energy production over a day or half-day usually do outperform climatology out to 6 or 7 days and hence provide some value to the user who can effectively employ that type of information.

It should be noted that forecast performance can vary substantially (5% or more of installed capacity) as a function of location, season, and weather regime. Much of this variability is related to the predictability of specific weather regimes. Some weather regimes are inherently more sensitive to small variations in the initial conditions at the start of the forecast. This sensitivity means that slight differences in the current conditions can give rise to large differences in the future conditions. Forecast performance in these cases is normally much worse than for regimes with less sensitivity.

4.6. GENERAL OVERVIEW OF FORECASTING APPLICATIONS

Several factors influence the accuracy of wind power prediction. The factors include

- accuracy of wind speed prediction,
- dampening and amplification of wind speed prediction error through the nonlinear power curve, and
- wind plant efficiency, including turbine availability and performance [1].

The following key results regarding general wind and power forecast performance were obtained as part of the Alberta Energy System Operator's (AESO) wind power forecasting pilot project conducted from June 2007-April 2008 [1]. During the project, wind and power forecast data were provided for forecast hours 1 through 48 by three independent wind forecasting firms. In the report, they are referred to as Forecaster A, B, and C. The analysis compared the predicted data to measured meteorological power data for seven existing Alberta wind power facilities (labeled Existing Facilities), and measured meteorological data and derived power data for five future Alberta wind power facilities (labeled Future Facilities).

The analysis was carried out by examining available data from each of the forecasts using seven categories as follows: (1) All Facilities (AF), (2) Existing Facilities (EF), (3) Future Facilities (FF), and four geographic regions, (4) South West (SW), (5) South Central (SC), (6) South East (SE), and (7) Central (CE).

The overall accuracy of wind speed prediction for the three forecasters was 1.4 to 3.5 m/s for annualized MAE and 1.9 to 4.7 m/s for annualized RMSE. The general accuracy of power prediction is shown in Figure 28 and Figure 29. The error measures shown are normalized by the rated wind power capacity. Figure 28 shows the annual normalized RMSE at different forecast horizons and regions for the three forecasters while Figure 29 presents the annual normalized MAE results.

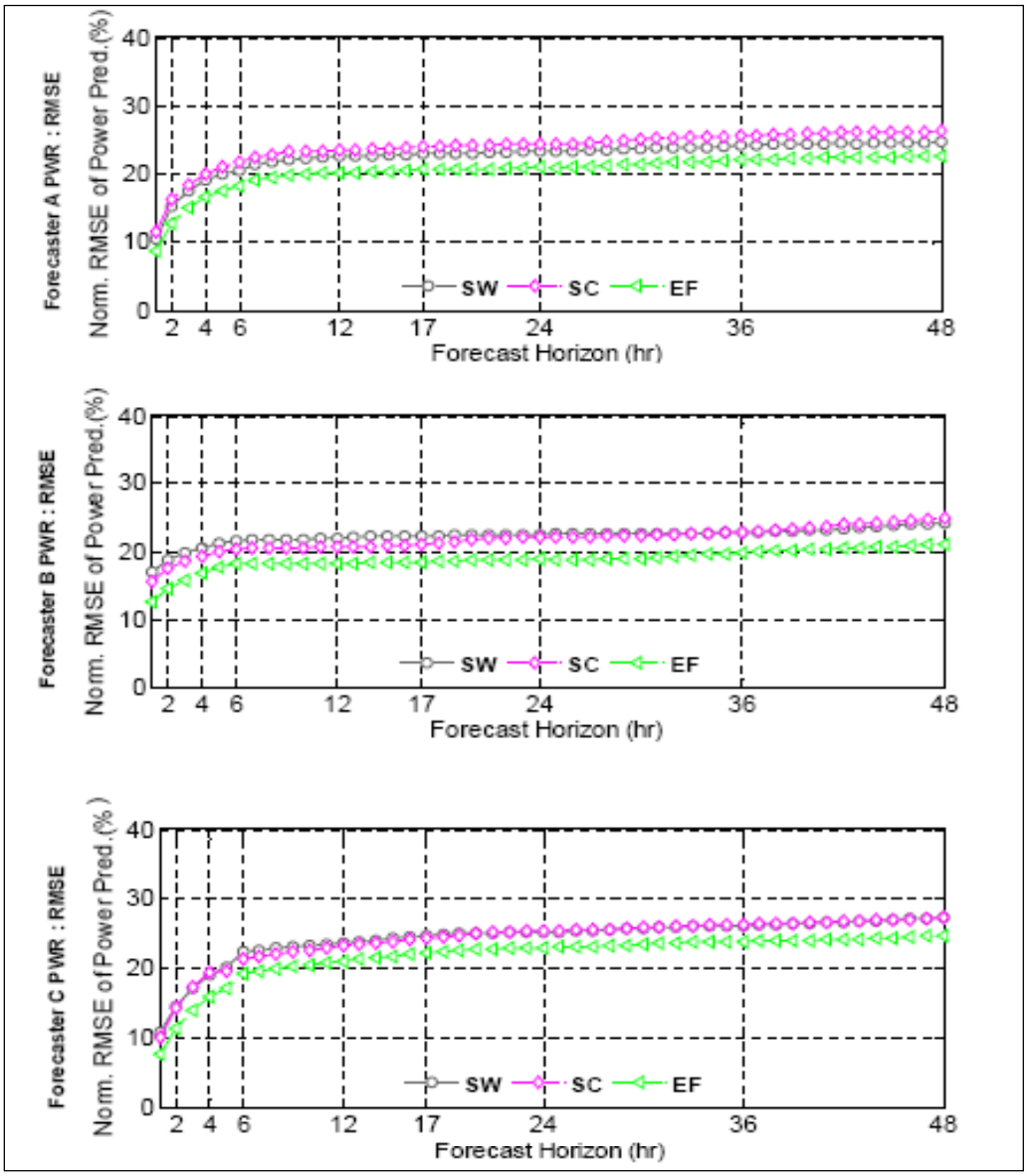

Figure 28: Annual Normalized Root Mean Square Error (RMSE %) of power predictions in South West (SW), South Central (SC), and existing facilities (EF) by three forecasters A, B and C as a function of forecast horizons. Note that the actual errors are normalized by the rated capacity (RC) of the region of power aggregation.

The normalized annual RMSE of the power prediction exhibits a general increase with time, particularly for the first six hours of the forecast horizon (Figure 28). Similar trends are evident for the normalized annual MAE (Figure 29). The normalized RMSE is in the range of 6% to 20% for the first six forecast horizons and 20% to 30% for the remaining forecast times.

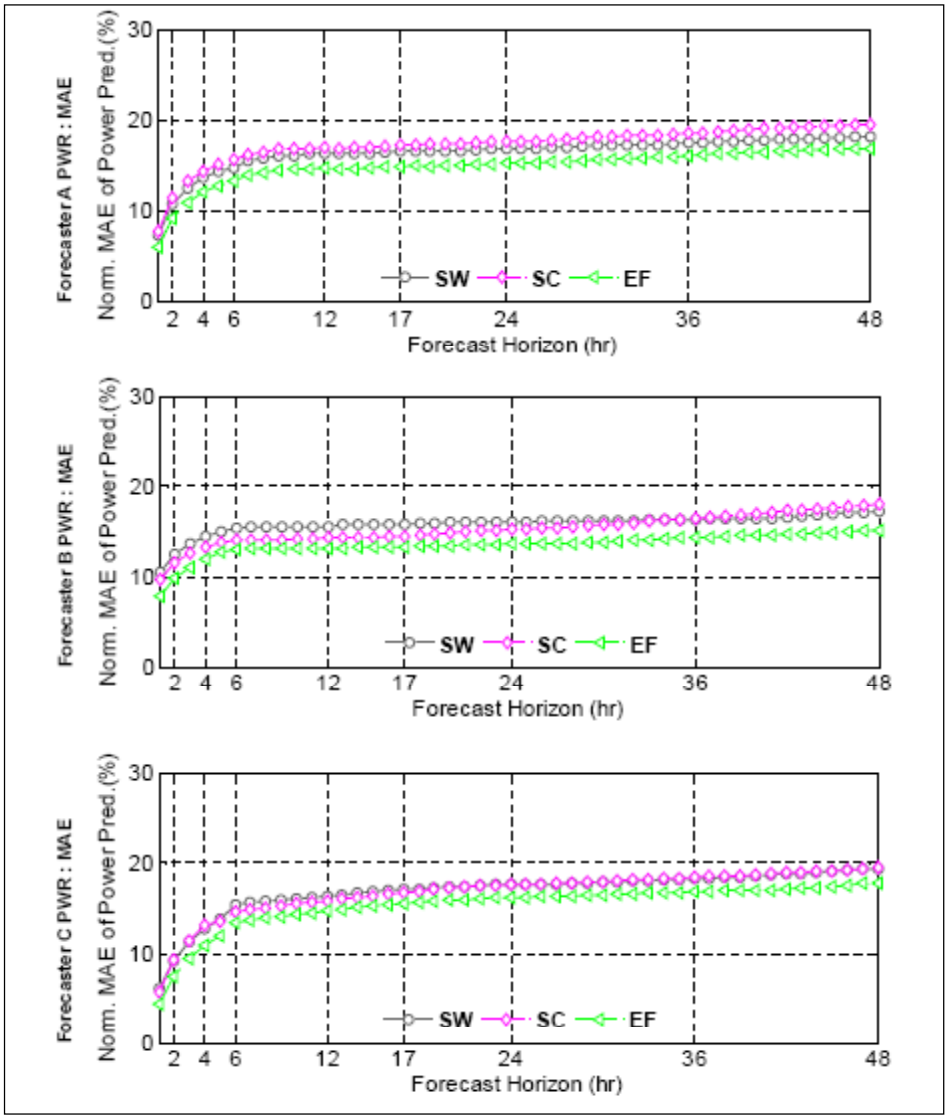

Figure 29: Annual Normalized Mean Absolute Error (MAE %) of power predictions in South West (SW), South Central (SC), and existing facilities (EF) by three forecasters A, B and C as a function of forecast horizons. Note that the MAE is normalized by the rated capacity of the region of aggregation.

It is very important to note that forecast performance varies significantly according to the size and aggregation diversity of wind plants. In the Alberta wind forecasting pilot project, the RMSE for regional day-ahead forecasts was 15-20% lower than for the individual plants, and the RMSE

for system-wide day-ahead forecasts was 40-45% lower than for the individual plants (Figure 30).

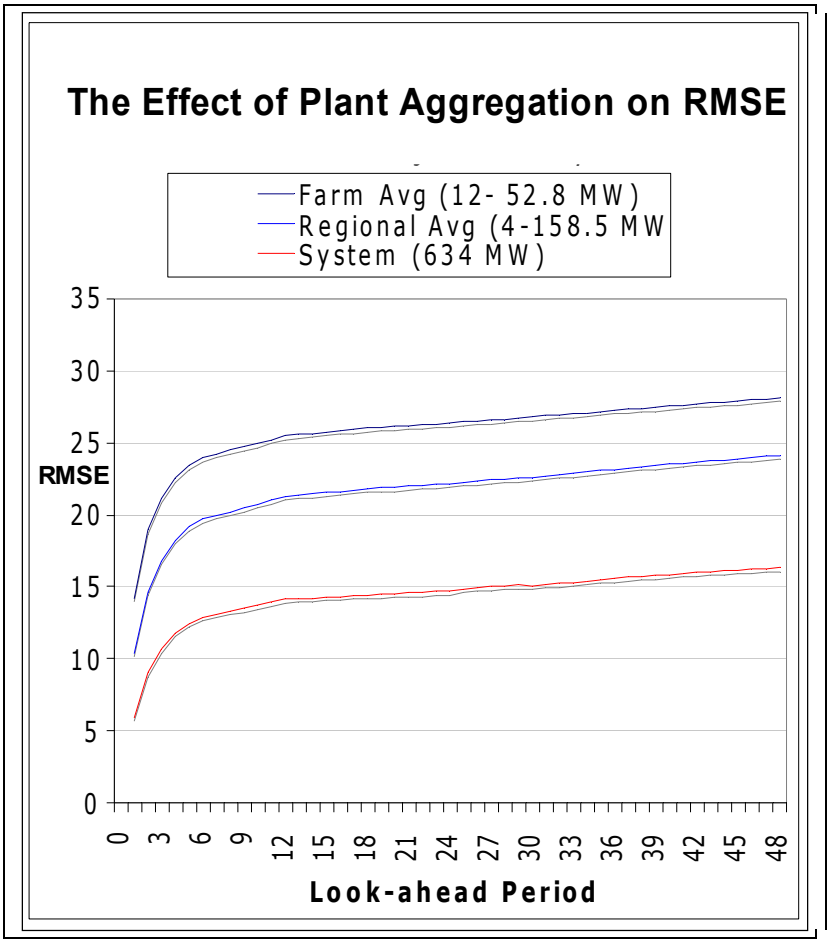

Figure 30: A time series showing the effects of plant aggregation on the RMSE forecast performance over a 48-hour forecasting period.

The impact of plant aggregation often results in a misconception that European forecast providers are much better than their North American counterparts. In reality, forecasts for European sites typically cover very large and diverse systems with low capacity factors. In contrast, North American forecasts are usually generated for smaller, much less diverse systems with higher capacity factors, and often for individual wind plants. For this reason, European forecasts with RMSE of 5% typically seem low by U.S. standards. In head-to-head studies for similar forecast regions, the performance statistics for North American and European forecast providers are very similar. The main point of this observation is that forecasting for larger resources in more uniform environments is easier than individual plants in diverse environments.

Figure 31 provides an estimate of the typical range of MAE (expressed as a percentage of the installed capacity) as a function of the forecast time horizon (look-ahead period) for the 1- to 12-hour forecast period. The MAE of very short-term forecasts is typically in the range of 5% to 15% and the errors increase rapidly (about 1.5% of installed capacity per hour) with an increase in

the forecast time horizon. After the very short-term period, the error growth rate decreases to about 0.1% of installed capacity per forecast hour. As a result, the mean absolute forecast errors remain in the 13% to 21% range for 1 to 2 days ahead and rise to the 20% to 25% range that is typical of a climatological forecast after about 3 days (not shown).

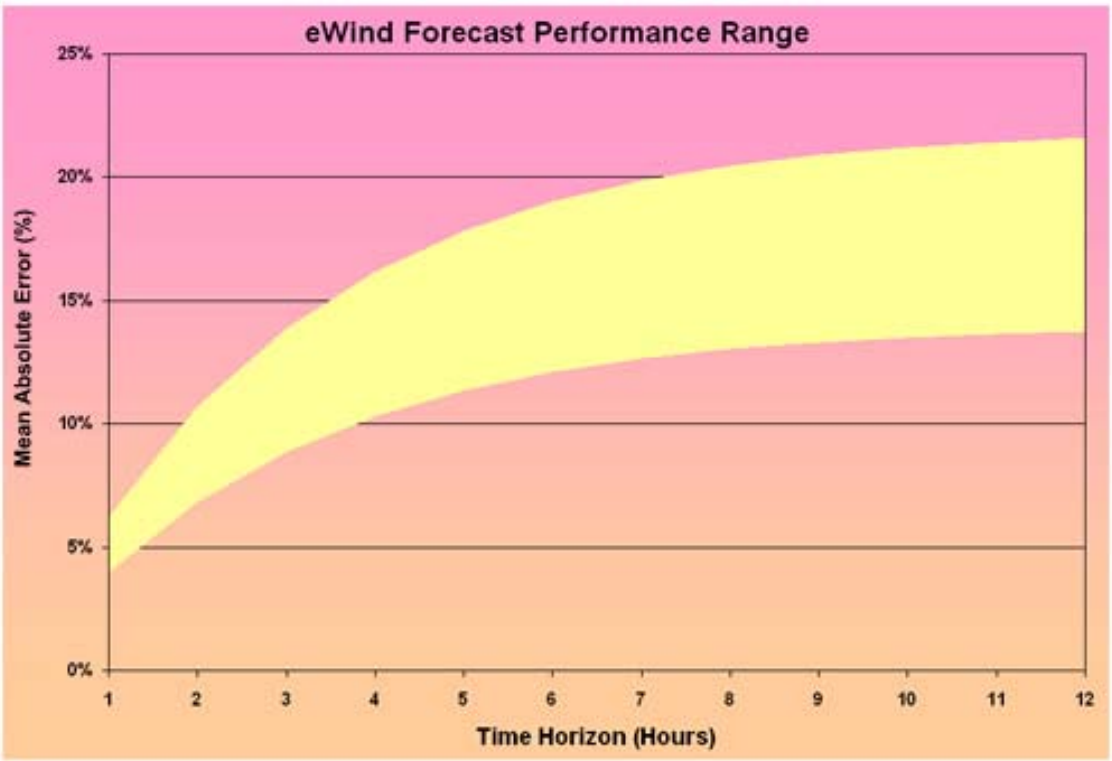

Figure 31: Typical range of current wind energy forecast performance as a function of forecast time horizon. Forecast performance is expressed as a mean absolute error as a percentage of a wind plant's installed capacity.

4.6.1. State-of-the-art: "Next-Hour" Forecasting

There are a wide variety of methods that have been or are being used to produce very short-term ("next-hour") wind energy generation forecasts. Figure 32 provides a schematic depiction with many components of the very short-term forecasting process and the ways they can be linked together to produce forecasts.

The simplest type of very short-term forecasts uses a time series of power generation data from the wind plant and a statistical procedure, such as multiple linear regressions or a neural network, to generate predictions of the future power output. These are often referred to as "persistence" or "autoregressive" models since their only source of information is the history of the plant power output. These models can be enhanced by using a time series of meteorological data from the towers or masts within the wind plant.

The addition of meteorological data from the met towers within the wind plant can be handled in two ways. In the first approach, the meteorological data are added to the pool of predictors and the power generation is predicted directly from the statistical model. In the second

approach, the meteorological data are used to forecast the meteorological inputs to a separate wind plant output model. The wind plant output model then uses these inputs to create an energy generation prediction. The second approach may have an advantage if there is more than one met tower within the plant because it may be possible to capture some of the variability in meteorological conditions within the plant and hence produce a better energy generation forecast.

Sophisticated statistical models, such as neural networks, may be able to find more subtle and complex relationships in the time series data and thereby generate better forecasts than simpler models such as linear regression. However, due to the fact that sophisticated statistical models usually have more adjustable parameters, they are prone to “over-fitting” problems if the training sample is not sufficiently large. Ultimately, all of these methods are limited by the fact that the input information is derived only from a history of conditions at the wind plant.

The next level of sophistication is to use multiple external data sources. The additional data sources can be used as input to the same types of statistical models used in the autoregressive approach. However, the number of predictors is larger. The additional sources could include data from nearby met towers or remote sensing systems. Another possibility is to use forecast output from a regional scale physical model. These models provide information about the larger scale trends in meteorological parameters but do not incorporate local area data and typically do not have the ability to resolve the local atmospheric and surface features that are critical to very short-term forecasting. However, some large-scale trends are well correlated with a local-scale response and hence the regional model data can, at times, add skill to the very short-term forecasts.

An approach that has yet to be thoroughly tested for very short-term wind power forecasting is to use a physical model with a high resolution grid to produce very short-term forecast simulations for the local area surrounding the wind plant. In this case, all of the available local-area data are assimilated into the initial state used to start the physical model simulation. This type of procedure has potential to simulate the atmospheric features that cause the wind variations in the vicinity of the wind plant. The output data from this local-area simulation is then fed into a MOS procedure. The MOS algorithm selects the best performing predictors from the large volume of physical model data and generates predictions of the wind speed and direction at the wind plant met towers. These predictions are then fed into a wind plant power output model to generate power output predictions. This method is a local-scale analog of the regional scale forecast procedures that have been used quite successfully for 1- to 2-day forecasting.

Another tool that can be used in the very short-term prediction process is a forecast ensemble model. As noted earlier, this is a statistical model that generates a composite forecast from a series of input forecasts generated by different methods.

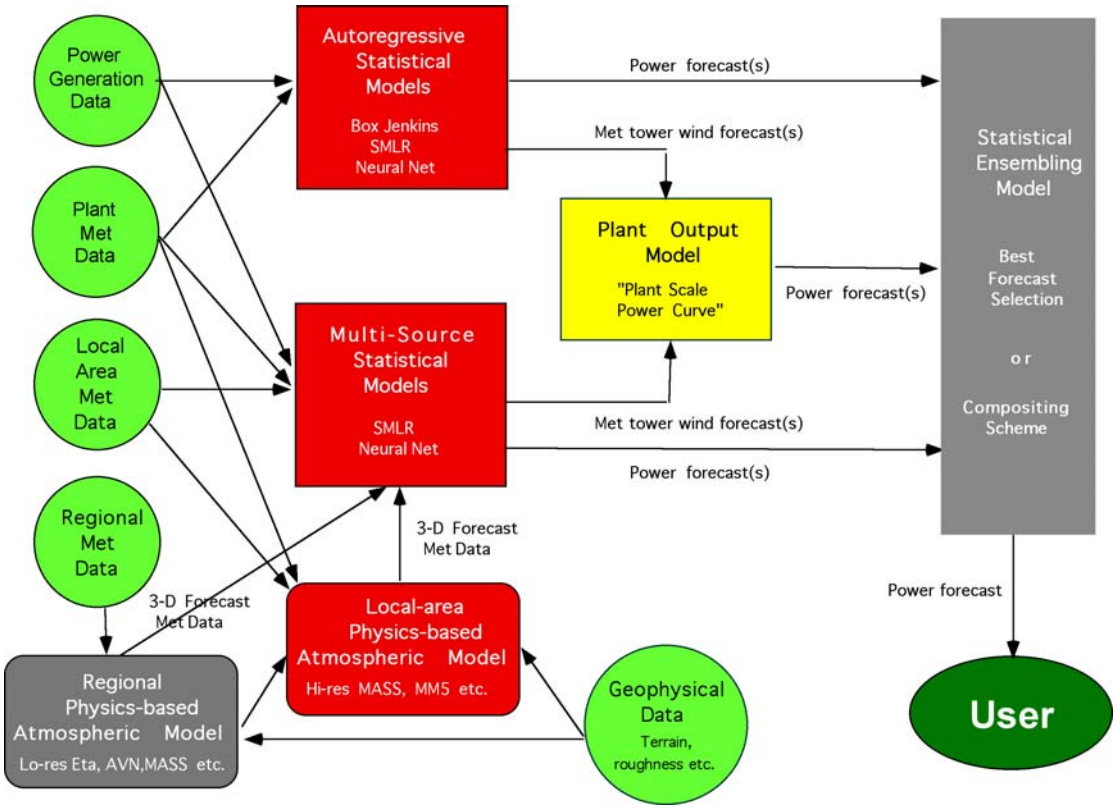

Figure 32: A schematic depiction of the interrelationship of the components of a very short-term forecast system.

After examining various methods that could be used in the very short-term forecast process, the obvious questions are (1) what is the typical level of performance that can be expected from very short-term forecast methods and (2) what is the variation in performance due to differences in methods, locations, seasons, and weather regimes? There have been a few controlled studies (such as the Alberta Project) [1] of forecast performance that included evaluation of very short-term wind energy forecast methods over a diverse mix of atmospheric conditions. However, most of the performance evaluations have been done by forecast providers or researchers and not by independent third parties. Therefore, it is still difficult to draw broad conclusions from the evaluations because the methods, locations, and times are different.

The performance of several very short-term forecasts for a wind plant in the San Gorgonio Pass of California is presented in Figure 33. This performance is somewhat typical for this site and season but experience indicates that there can be large variations in performance from site to site and season to season. In this example, all methods yield a small improvement over persistence during the first couple of hours of the forecast period. The methods that use regional physical model data become significantly better than persistence after about 4 hours.

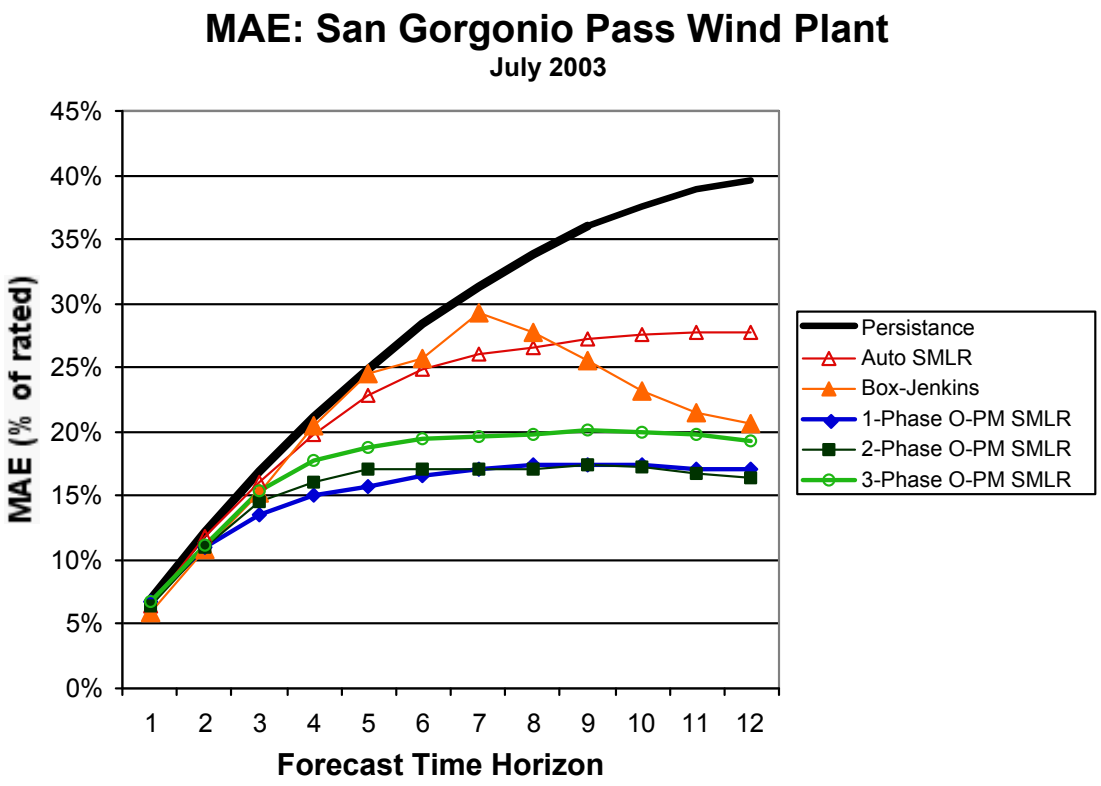

Figure 33: The mean absolute error by forecast hour during July 2003 for five very short-term forecast methods and a simple persistence benchmark forecast for a wind plant in San Gorgonio Pass. The "SMLR" acronym refers to a screening multiple linear regression procedure. "O-PM" refers to the use of both observational and regional physical model data as input to the statistical procedures.

4.6.2. State-of-the-art: "Day-Ahead" Forecasting

Short-term forecast methods use essentially the same tools as very short-term forecast techniques. However, there are two important differences: (1) the importance of real-time data from the wind plant and its immediate environment is significantly reduced; and (2) regional and sub-regional simulations with a physics-based atmospheric model play a much more significant role in the forecast process.

Almost all short-term forecast procedures begin with the grid point output from a regional-scale physics-based atmospheric model. Typically, these models are executed at a national forecast center, such as the National Centers for Environmental Prediction operated by the U.S. National Weather Service, ingest data from a wide variety of sources over a large area, and produce forecasts of regional-scale weather systems for a several day period. However, these models do not resolve the physical processes occurring in the local or mesoscale areas around individual wind plants. (The mesoscale scale is between the large-scale weather systems and the local scale approximately 5 - 100 km). The three-dimensional output data from the regional-scale forecast simulations is the basic input into most short-term wind energy forecast systems.

The forecast methods differ substantially from this point. Some forecast procedures attempt to go directly from the regional-scale forecast data to the local scale through the use of either

diagnostic physical models, statistical models, or a combination of both. The Prediktor system developed by the Risoe National Laboratory in Denmark uses this approach. The main drawback of Prediktor is that it misses the processes occurring at the sub-regional or mesoscale.

An alternate approach is to execute sub-regional scale simulations with a physics-based model to account for the mesoscale processes. This is the approach used by AWS Truewind (AWST) in their eWind system and a couple of other North American forecast providers. A schematic depiction of the eWind system is presented in Figure 34. This approach has had considerable success in forecasting the variations in winds attributable to mesoscale processes but it has a much higher computational cost than the regional-to-local forecast schemes. Both the regional-to-local and mesoscale simulation approaches typically employ statistical MOS type models to predict the wind speed and direction at the wind plant's met towers. The predictors are based on either the output from the mesoscale simulations (mesoscale approach) or from the regional or diagnostic physical models (regional-to-local approach).

It is possible to predict the energy generation directly from physical model output through the MOS process. However, most forecast systems are configured to produce wind predictions for the met tower sites from the MOS and then use these predictions to create the energy generation forecasts from a wind plant output model. The wind plant output model can be either physical or statistical. The Prediktor system has the option to use either a physical model in combination with a second MOS procedure to remove any systematic errors or a purely statistical scheme. The eWind system uses a statistical wind plant output model.

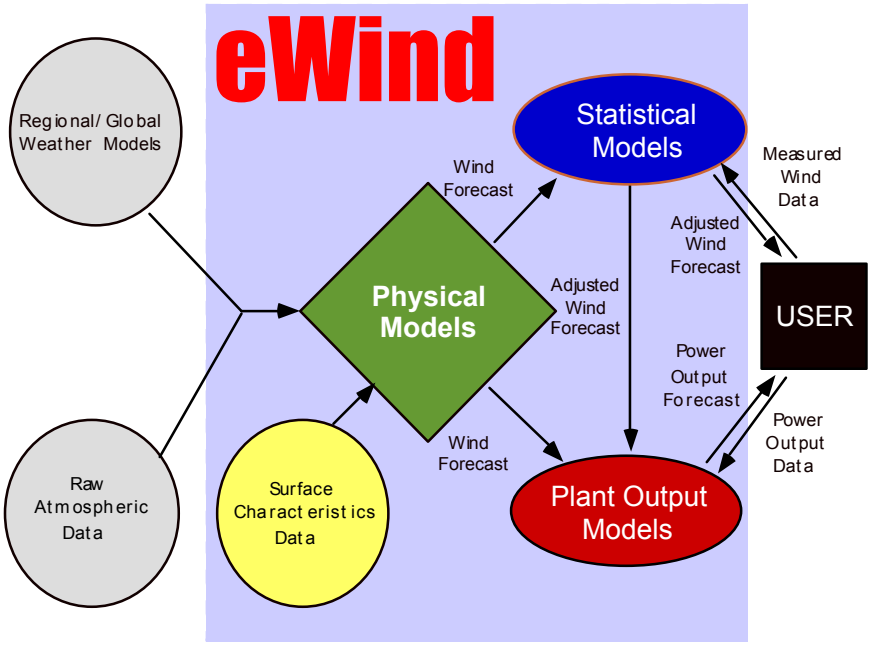

Figure 34: A schematic depiction of the major components of the eWind short-term wind power forecast system

As in the case of very short-term forecast performance, a quantitative assessment of the state of the art in short-term wind energy generation forecast performance is difficult to obtain because most evaluations are done by individual forecast providers and researchers. The methods, locations, and time periods used in these forecast performance evaluations vary substantially. Therefore, it is difficult to determine the causes of performance differences.

There are two "third party" investigations that included the evaluation of short-term day-ahead forecast performance. One project was funded under the Alberta Electric System Operator wind power forecasting pilot project [1]. The other project was funded by the California Energy Commission (CEC) and managed by the Electric Power Research Institute (EPRI) [2].

The objective of the EPRI-funded project was to assess the state-of-the-art in wind energy forecasting for California. Two forecast providers participated in the project. Each used their own forecast system to produce 1- to 48-hour wind energy forecasts for two wind projects in California during a 1-year period from September 2001 to October 2002. One forecast provider was Risoe National Laboratory from Denmark; they used their Prediktor system. The other provider was AWST; they employed the eWind forecast system. One of the participating wind projects was the 66 MW Mountain View wind plant in San Gorgonio Pass, that is located just to the east of the Los Angeles Basin in southern California. The other project was a 90 MW plant located in the Altamont Pass, that is located just to the east of the San Francisco Bay Area in northern California.

A summary of the forecast performance results from this project is presented in Table 2. The performance statistics in this table are for all forecast hours (i.e. 1-48) and for the entire 12–month evaluation period. The MAE as a percentage of installed capacity is in the 14% to 21% range. This range is typical for 1- to 2-day forecast performance. The percentage MAE of both forecast systems was lower for the Altamont Pass plant. However, the Risoe system showed a greater difference in forecast performance between the two plants than the AWST system.

Figure 35 and Figure 36 depict the MAE of the AWST persistence and climatology forecasts by forecast hour for each of the plants. It can be seen that persistence forecasts are best in the first few hours for both plants because no real-time information from the plant or its immediate environment was available for use in the forecast process. After the initial period, the AWST forecast method outperforms the persistence and climatology forecasts by a substantial margin. This result is typical of forecast performance at most sites.

These figures also provide an indication of the forecast error growth rate as a function of forecast look-ahead period. The error growth for the San Gorgonio Pass wind plant (2% of installed capacity per 24 hours) is approximately twice as large as the rate for the Altamont Pass plant. This difference is most likely attributable to the physical properties of the site and its immediate environment as well as differences in weather regimes affecting the two areas over the course of the year.

This study served to document the expected level of performance of short-term wind energy forecast systems. It indicated that state-of-the-art forecasts systems have considerable skill over climatology and persistence forecasts for 1- to 2-day periods. It also demonstrated that 1- to 2-day forecast performance can vary substantially by location, season, and attributes of the forecast system used to generate the predictions.

Table 2: A summary of the forecast performance results from the EPRI-CEC project.

Parameter	Risoe	TrueWind
Mountain View (66 MW rated)		
Mean Error (kWh)	2,888	628
MAE(kWh)	14,305	11,834
MAE(% of rated)	21.7%	17.9%
Skill vs. Persistence (%)	9.5%	32.6%
Skill vs. Climatology (%)	19.8%	33.7%
Altamont (90 MW rated)		
Mean Error (kWh)	702	631
MAE(kWh)	12,985	12,438
MAE(% of rated)	14.4%	13.8%
Skill vs. Persistence (%)	21.6%	30.8%
Skill vs. Climatology (%)	26.2%	29.6%

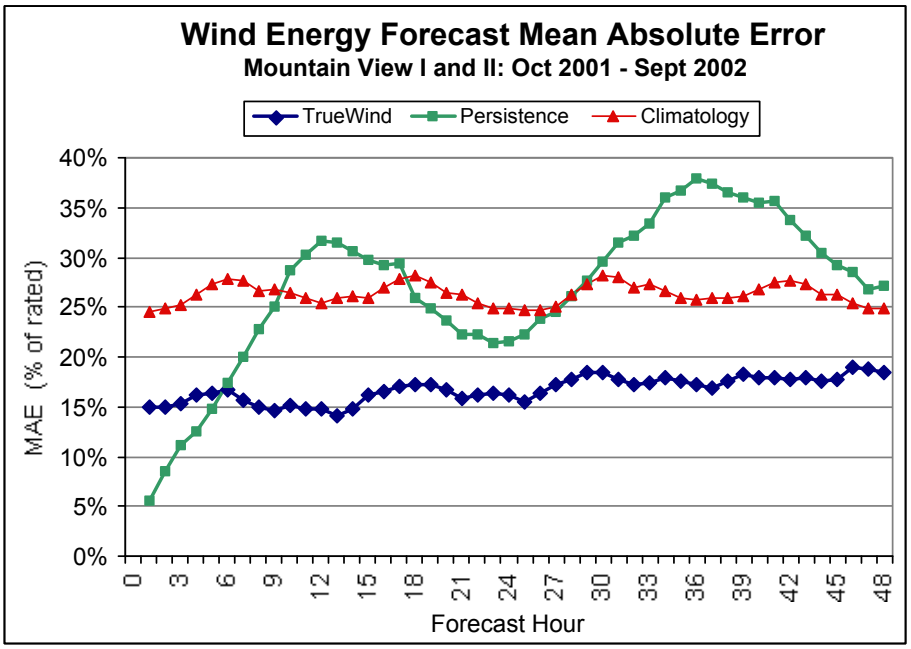

Figure 35: The mean absolute error by forecast hour for 12 months of AWST (eWind), persistence, and climatology energy generation forecasts for a wind plant in San Gorgonio Pass

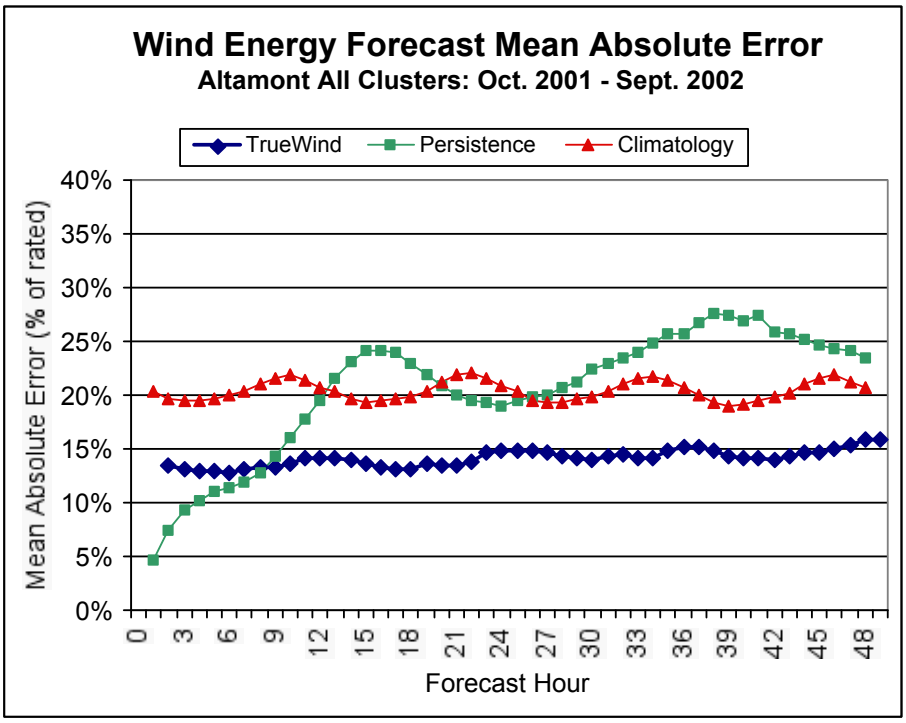

Figure 36: The mean absolute error by forecast hour for 12 months of AWS Truewind (eWind), persistence, and climatology energy generation forecasts for a wind plant in Altamont Pass.

4.6.3. Early Warning Ramp Forecasting System

As the amount of wind generation increases on grid systems, the occurrence of large and rapid changes in power production (ramps) is becoming a significant grid management issue. A good operational ramp definition is *a change in power output that has a high enough amplitude over a short enough period of time to cause short-term grid management issues*. The operators must ensure there is always sufficient conventional generation and/or responsive load ramping capability to compensate for a downward ramp in wind power output. Thus, from a grid management perspective, accurate forecasting of ramps may be more important than minimizing the overall MAE or RMSE of the typical power production forecasts. Upward ramps can be more easily managed by curtailment if necessary; therefore downward ramps are more important. For downward ramps, the wind power must be replaced as it is lost to eliminate the need for more drastic measures, such as load shedding [1].

The forecast of wind ramps is similar to lightning in that both must warn system operators so preparations can be made before the event occurs

Forecasting techniques that are optimized for the typical wind conditions do not do well in forecasting rapid changes in winds that cause power ramps. Since ramps have such a great impact on power production forecasts, ramp forecasting needs to be considered as a separate forecasting problem with a methodology and system put in place that is designed specifically to forecast and alert operators of the likelihood of events. In addition to forecasts of the likelihood

of a ramp event, AWST experience suggests that grid operators want the meteorological cause of the event (front, thunderstorm line, etc.) so they can track it in real time.

Ramps in wind power production are caused by several different types of meteorological processes. Each type of ramp has a unique set of characteristics and forecast issues. The data and type of forecast method required to optimally predict each type of ramp event are dependent on the meteorological process that caused them.

The cause of ramps can be divided into two categories:

- Scale of the phenomena: Large scale processes that cause ramps include phenomena such as cold fronts and upper tropospheric shortwave troughs of low pressure. Smaller scale processes include phenomena such as outflow boundaries from thunderstorms, changes in wind direction across a mountain range, and formation or erosion of shallow pools of cold air.
- Processes primarily acting in the horizontal or vertical: Horizontal processes, such as those associated with fronts, tend to move from a location some distance away from the plant into the plant area. These events can be identified and tracked with observing tools, such as meteorological radars and satellite images. Vertical processes that cause ramps include phenomena such as the formation of a shallow pool of cold air or the vertical mixing of the atmosphere. These processes tend to form in place and are therefore more difficult to track and forecast. The vertical profile of wind and temperature is the most useful parameter to monitor for these events.

A ramp forecasting system should alert operators about the occurrence of a ramp at the earliest possible time. For days 3 though 7, only daily probabilities should be given in terms of the likelihood of a ramp being greater than, about the same as, or less than the climatological norm for such an event. The day-head forecast should be more precise giving probabilities of ramp occurrence for each hourly time period. The forecasts needed for the first 24 hours should include the probability, amplitude (magnitude), duration, type, and cause of the event. The 24-hour forecast should also include the meteorological feature causing the ramp in order to aid operators in tracking the event in real time. Finally, the alert system should include hourly ramp forecast updates for situations when a ramp event has been forecasted within 24 hours.

The ramp forecasting system needs to be different from the forecasting system designed to reduce typical errors by minimizing RMSE or other standard metrics. Inevitable phase errors in features causing ramps (such as cold fronts) can produce large errors especially when considering squared quantities such as RMSE. For this reason, a forecast system that minimizes RMSE tends to smooth out power ramps over many hours.

Ramp forecasting systems should be designed to estimate the probability of a ramp occurring in any given hour, the actual amplitude (or a probability distribution of amplitudes), and the uncertainty in timing/duration of the ramp. Inputs to such a system would include amplitude and timing of actual ramps forecasted by physics-based (numerical weather prediction or *NWP*) models, a statistical forecast method, or an optimized ensemble forecast.

In order to forecast ramps, it is necessary to develop ramp climatologies for a region. Using ramp climatologies, the forecast provider then develops algorithms to identify regional or local

parameters from available met towers or remote sensing system data that have a statistically significant ability to discriminate between ramp and no-ramp cases, especially during the first 6 hours of a forecast. These data are then analyzed in order to identify the sensitivity of site specific ramp forecasts to making additional measurements at different locations. In order to forecast the needed parameters, a provider could run a real time, regionally-customized rapid-update-cycle NWP-based tool designed for large ramp forecasting applications. NWP models configured with a very high-resolution grid (1-km grid cells) for such applications are initialized every hour and used to make 12-hour forecasts from these initial conditions. The initial state is created by updating the previous 1-hour forecast with the latest wind plant met data as well as other regional met tower and remotely sensed measurements.

One final consideration relates to ramp forecasts for aggregates of wind plants. Ramps will tend to be slower in terms of percent change in capacity for aggregates that include a large number of wind plants distributed over a wide area at locations with varied wind regimes. These types of aggregates tend to include many wind plants that have power time series that are relatively uncorrelated. For this reason, strong upward ramps at some wind plants tend to be offset by downward ramps or at least washed out by weaker ramps or steady production at other plants. However, wind plants are often built in a few relatively small regions to take advantage of the highest climatological wind speeds. This strategy tends to produce aggregates in which the individual plants are highly correlated and are prone to more frequent, large ramps.

4.6.4. Severe Weather Warning System

In addition to the routine and ramp forecast systems, there is a need to provide operators with information regarding the broader weather situation, especially with respect to extreme meteorological events that may have a serious impact on wind plant operations. Information and forecasts of severe weather events such as high winds, thunderstorms, hail, tornadoes, sleet, freezing rain, and heavy snow should be provided. In addition, information on the feature causing the event should be provided so operators can track and verify the actual occurrence in real time.

When there is a potential for severe weather within 24 hours, the severe weather warning system should deliver hourly updates to operators. For the day-ahead, only the general potential of high, moderate, or low risk would be provided for each category of severe weather.

4.6.5. Forecasting for Offshore Wind Plants

Offshore meteorology and its impact on power fluctuations and wind forecasting still requires significant research for offshore power plants. There are two considerations that distinguish forecasting for onshore versus offshore wind plant facilities. The first is forecasting the wind itself and the second is forecasting the waves that can impact various operations associated with the offshore wind plant.

Looking first at wind, there are fundamental differences between conditions over land and water due to the influence of the surface on the flow. The most significant one is the roughness of the sea that is much lower than land areas but varies due to the changing sea state conditions (i.e. waves) [3]. In general, the atmosphere is more often characterized by neutral or stable conditions over water given that the underlying surface does not heat or cool as rapidly.

Offshore near the coastline, there are differences and complexity due to abrupt changes in surface roughness and the surface temperature that lead to important transition effects for the wind blowing from land to water. Other factors such as the shape of the coastline, islands locations, and currents/tides also affect wind speeds over water [4].

If the forecast model is formulated correctly to handle ocean roughness and stability differences, errors in wind forecasting would likely be lower over water than land when the sites are five miles or more offshore. The error could be larger near the coastline because of the complexities associated with the coastal factors similar to that of a complex terrain region over land.

In addition to the complexities of the coastal regions, there are fewer measurements of current wind conditions, surface temperatures, and other meteorological variables over water to initialize forecast models. There is also a problem of observing wind at turbine hub height. Most weather buoys make wind measurements at only three to five meters above the ocean surface whereas modern wind turbine hub heights are 80 meters or more. Tall met towers are needed to collect wind, temperature, and other meteorological data and better characterize the local offshore environment as well as validate forecast models.

Marine operations associated with construction and maintenance of offshore wind plants require accurate wave forecasts. For wind plants located in shallow coastal areas, the wave forecast model needs to consider local bathymetric features and include all shallow water dynamics. Deep water ocean wave forecast models would not meet the shallow wave requirements. When forecasting for offshore sites, providers should include models that accurately represent the marine boundary layer, momentum exchanges between the air-water interface, and deep as well as shallow ocean waves.

4.7. POTENTIAL FOR IMPROVED FORECAST PERFORMANCE

Although both very short-term and short-term forecasts made with state-of-the-art forecasting systems currently exhibit considerable skill relative to benchmark persistence and climatology forecasts, there are still many opportunities for forecast improvement. There is also an opportunity to extend the range of hourly energy forecasts that have skill over climatology to at least 72 hours. This section gives an overview of (1) how forecast improvement at each of the three major time scales is likely to be achieved and (2) provides an estimate of the amount of improvement that may be expected over the next 10 to 15 years.

4.7.1. Medium Range

Current hourly wind forecasts and the associated energy generation forecasts beyond approximately 3 days have very little skill over climatology, although daily average forecasts of wind speed and energy generation do have some skill over climatology out to 6 or 7 days. As forecast technology improves over the next 10 to 15 years, it is likely that forecasts beyond 3 days will become useful to the wind energy community.

The charts in Figure 37 and Figure 38 provide a perspective on the long-term trend in forecast improvement and what it may mean for future performance [5]. Figure 37 depicts the yearly average skill score (S1) for forecasts of the mean sea level pressure gradients made by several

different forecast models run by the U.S. National Weather Service during approximately the last 50 years of the 20th century. The 36-hour S1 scores in Figure 37 for mean sea level pressure gradients constitute one of the longest continuous records of forecast verification anywhere. Therefore, it is a metric that can be used to define the trend in forecast performance over a long period of time and provide some guidance about future performance. It should be noted that S1 scores measure the skill in forecasting large-scale features associated with regional and continental scale weather systems and not the smaller scale pressure gradients responsible for variations in local winds around plants.

The S1 scores that are depicted in Figure 37 clearly indicate significant progress in the ability to forecast large-scale sea level pressure gradients. The first numerical weather prediction models went into operational use in the middle 1950s; the S1 scores began to steadily improve after that time. The forecast performance improvements after the 1960s have been attributed to: (1) more observed data; (2) better methods for incorporating data into models; and (3) model enhancements. The improvement was persistent if not dramatic from the early 1960s through the end of the 1990s. Thus, by the mid 1990s, the *72-hour* forecast of the mean sea level pressure gradient was typically about as good as the *36-hour* forecast in 1980.

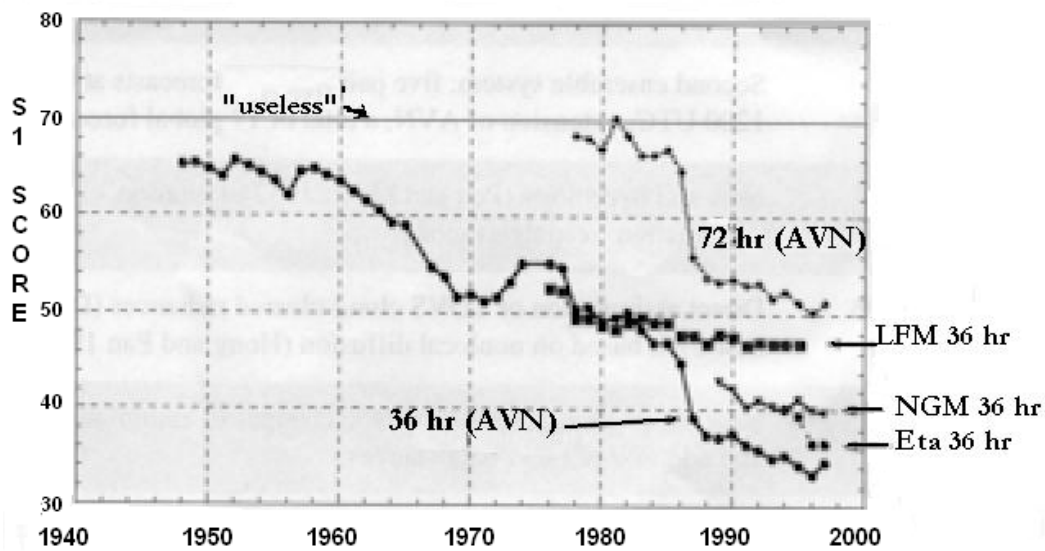

Figure 37: A depiction of the yearly average S1 scores for forecasts of the mean sea level pressure gradient over North America produced by several different U. S. National Weather Service models (AVN, LFM, NGM and Eta) during the second half of the 20th century from [5]. The S1 score is a measure of the relative error of the gradient of a parameter over a specified region. The mean sea level pressure gradient is strongly correlated with the near surface wind speed at most locations within several hundred meters of sea level. A lower score indicates a more accurate forecast. A S1 score of about 70 is generally considered useless while a score of about 20 is almost perfect for most practical applications.

Figure 38 shows the more recent trend of the 500-mb (~ 5000 meter) height forecast performance for global models. Though not directly related to forecasting low-level winds, it does show the same general trend as S1 scores for sea level pressure.

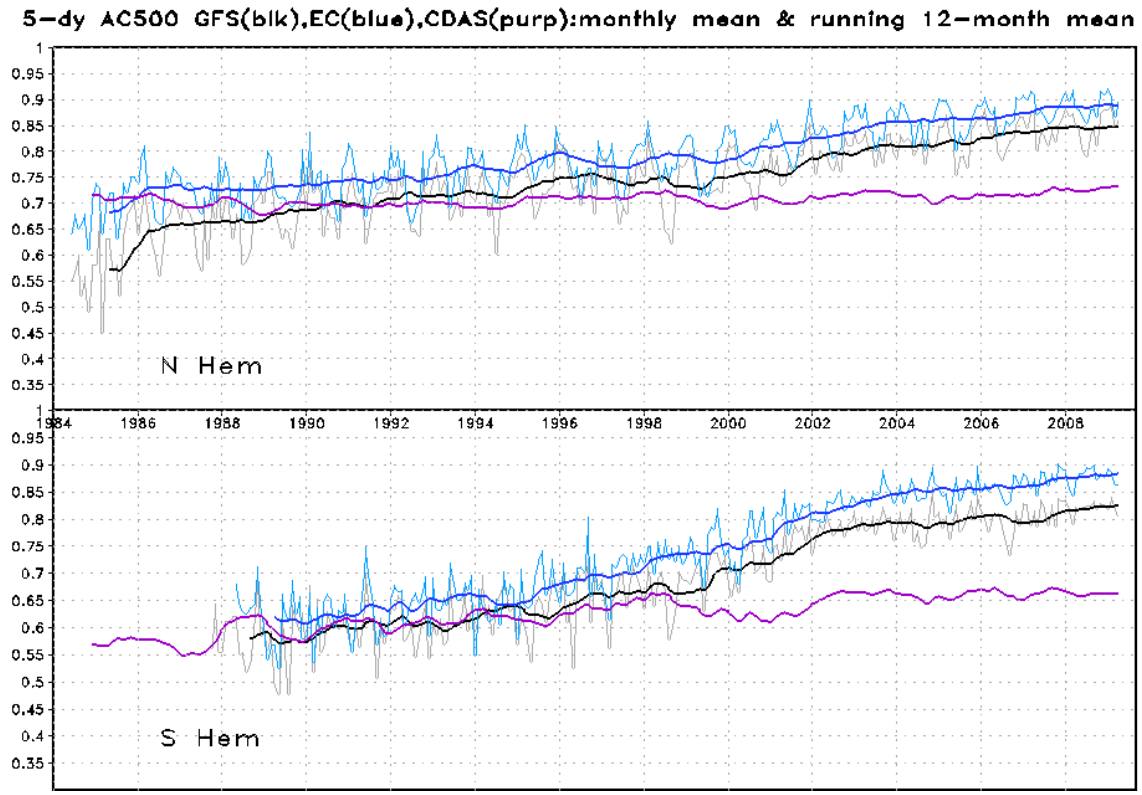

Figure 38: Time series of monthly mean anomaly correlations for 5-day forecasts of 500-hPa heights with 12-month running means plotted at the end of the year for GFS (black), EC (blue), and CDAS frozen model (purple) since 1984, northern hemisphere (top) and southern hemisphere (bottom).

From Figure 37 and Figure 38 it is possible to estimate the likely improvement in wind forecast skill over the next 10 years. The rate of forecast improvement inferred from the S1 data in Figure 37 suggests that the performance level of a 36-hour forecast in the 2003 - 2006 era would be achieved for a 72-hour forecast by approximately 2015; the performance level of the 72-hour forecast in the 2003-2006 period might be achieved for an 108-hr (4.5-day) forecast by 2020.

What does this projection mean for wind energy forecasts? Currently, a typical 36-hour forecast of the hourly energy generation has a mean absolute error of about 13-18% of a plant's installed capacity and a skill score (% reduction in mean absolute error) of about 30% over a climatology forecast. Therefore, this level of performance is likely for a 72-hour forecast by 2015. At present, a 72-hour forecast of the hourly energy output of a wind plant is near the end of the time period for which a forecast has skill over a climatology forecast. At this range, the typical MAE is between 20 and 25% and the skill over climatology is a few percent. This level of performance is a reasonable expectation for a 108-hour (4.5-day) forecast by 2015.

It is likely that these extrapolated improvements in forecast performance will be achieved since research and innovation continues to be very active in all three of the previously mentioned areas that have been driving forces behind the improvements depicted in Figure 37 and Figure 38. The improvements in remote sensing data are accelerating mainly due to advanced instrumentation aboard geostationary and polar-orbiting satellites. Improved techniques of

incorporating various types of data into regional and global scale models are also being developed. Finally, the research community continues to develop and improve the physics-based atmospheric numerical models, benefiting particularly from the wide range of modeling groups in the government, university, and private sectors. Underlying these changes is the relentless advance of computing technology, making more powerful machines available at lower costs to execute more sophisticated models. Research is also underway in the development of new forecasting techniques. It has already been shown that the ensemble technique can produce better forecasts than conventional single-simulation forecasts beyond five days. With very active research in this area, it can be expected that the ensemble approach will be more widely used to improve the accuracy of shorter-term forecasts as well.

4.7.2. Short Term (Day-Ahead) Forecasting

The challenges of day-ahead forecasting are conceptually similar to those associated with the medium range forecasting task. However, the manifestation of the issues is different because the time and space scales are different. The skill in day-ahead forecasting is mostly related to the prediction of regional scale and mesoscale atmospheric features. The use of conventional atmospheric data and physics-based atmospheric models has proven to be an effective tool for this application.

The current expectation is that the bulk of future improvements for day-ahead forecasting will come from (1) continued improvements in regional physics-based atmospheric models as well as (2) increasing the amount and quality of data used to initialize the models. The new generation of atmospheric models currently being used and refined (e.g. the Weather Research and Forecasting model) by government and academic agencies employs more advanced representations of atmospheric physics and more sophisticated data assimilation techniques.

The expectation is that more sophisticated satellite-based sensors will be deployed over the next few years. This instrumentation will provide more accurate and detailed data sets describing the state of the regional atmosphere for initializing atmospheric models. Historical trends suggest that better initialization data will result in improved forecasts for wind energy and other applications.

A technique being explored for use in improving wind forecasting for both the day-ahead and hour-ahead forecast period is called “observation targeting.” The objective of observation targeting is to determine the “best” locations and parameters to measure in order to achieve the greatest positive impact on forecast accuracy at a particular site. The best locations are determined by analyzing climatological sensitivity of NWP forecasts to perturbations in the initial state for the look-ahead periods and locations of interest. Observations for locations and parameters that exhibit the greatest sensitivity have the most potential to reduce forecast error. It is still relativity early in the investigations but the hope is that observations can be targeted for specific cases such as large ramp events.

As noted earlier, a third component of the short-term forecast process is the MOS procedure. This scheme links the grid point data that come from the physics-based atmospheric models and the quantities to be predicted. Most current MOS procedures use a fairly traditional multiple linear regression approach to create the relationships. However, forecast accuracy may be improved using a more advanced statistical model such as a neural network for this application.

The ability to simulate more accurately the evolution of mesoscale features for a 24- to 36-hour period will help improve the quality of 1- to 2-day forecasts. A reasonable expectation is that in 10 years the mesoscale features will be forecasted 24 to 36 hours in advance as well as they are now forecasted 6 to 12 hours in advance. Thus, the performance of 36-hour wind energy forecasts in the year 2015 is likely to be as accurate as current 6- to 12-hour forecasts. This translates into an MAE of about 10-15% of installed capacity and a skill score of about 40% over a climatology forecast for a typical wind plant in the middle latitudes.

4.7.3. Very Short-Term (Next-Hour) Forecasting

The skill of very short-term forecasts is mostly limited by the inability to (1) define the initial structure of the atmosphere in the local area (0-200 km) around a wind plant (i.e., what is happening now?) and (2) extract the complex relationships between the measured data that serve as input to the forecast process (i.e. predictors) and the wind energy production (i.e., how is what is happening now related to what will happen in the future?).

The “what is happening now” part can be addressed by obtaining more atmospheric data from the local area surrounding the plant. The issue is determining the most cost-effective way to make such measurements. One suggestion offered numerous times in recent years has been to install "upwind" met towers to provide information about atmospheric features that are approaching a wind plant. A paper presented at the WindPower 2003 Conference demonstrated some forecast skill improvement for a wind plant on the Oregon-Washington border through the use of upstream-type met tower data in the Columbia River Basin [6]. Although there was some success in this case, there are a number of issues including tower location, installation cost, and maintenance.

This approach may be cost effective in an environment where the upstream wind direction is relatively uniform or dominant in one or two sectors. However, it may be less cost effective in an open setting where wind direction is more variable. One way to optimize instrument siting (and associated cost) is to identify the surrounding sites that are highly correlated with the variations in wind at the wind plant and install measuring equipment at only these locations. An alternative approach is to deploy surface-based remote sensing systems such as wind profilers, Doppler radars, or lidars. These instruments provide wind data over a limited atmospheric volume at a relatively high cost. It would not likely be cost effective to install such equipment solely for forecast applications around a wind plant. However, if they are already operating in a region, short-term forecasts could be improved by using data from these sensors.

Another possibility is to use data from satellite-based sensors. These instruments typically measure the amount of radiation coming from the atmosphere in multiple bands or channels that correspond to specific electromagnetic wave frequencies. The radiation measurements can be used to obtain estimates of temperature and moisture profiles of the atmosphere. They also can be used to provide some information about winds by tracking clouds.

The other part of the problem is to develop better relationships between what is happening now and what will happen in the next few hours. One approach is to employ more advanced statistical models and to optimize their type and configuration for the wind energy-forecasting problem. Techniques such as neural networks and fuzzy logic clustering may be able to identify more subtle and complex relationships between the raw input data and the quantities to be

predicted. However, these advanced statistical approaches do not always improve forecasts and typically carry a high computational cost.

Another approach to mapping the relationship between the growing volume of input data and the forecast variables is to use a high resolution physics-based model. In this process, the model assimilates local-area data and generates a very short-term three-dimensional representation of the atmospheric conditions surrounding a wind plant. The fundamental principles of physics (i.e. conservation of mass, momentum, etc.) provide the links between the measured data and the forecasted quantity. This approach has never been used to generate very short-term, operational wind energy forecasts mostly because of the high computational cost. However, the steadily declining cost of computing platforms is now making this option economically viable.

Finally, improvements to plant output models could potentially benefit very short-term forecasts as well as longer time scales of wind energy forecasting. The improvements are likely to come from more (1) abundant and higher quality meteorological and energy generation data, (2) sophisticated wind plant data gathering and communications systems, and (3) detailed statistical or physical plant output model formulations.

It is likely that the improvements in forecast models as well as data coverage and quality in the local wind plant environment will yield meaningful improvements in the performance of 0- to 6-hour forecasts over the next 10 years. However, it is difficult to provide a quantitative estimate because the documented history of these very short-term wind energy forecasts is brief and the current state-of-the-art in performance for this time scale has not been as firmly established. A reasonable expectation is that there will be a 15% to 25% reduction in the typical MAE values for 0- to 6-hour forecasts over the next 10 years. This level of MAE reduction would result in an increase in the persistence-based skill score from about 20% at the present time to the 30% to 40% range in the year 2020.

4.8. DATA REQUIREMENTS

Both power production data and meteorological data play an important role in the generation of high quality wind power production forecasts. These data are used for initialization and verification of forecast models. Data from a wind plant serves three purposes in the forecasting process namely to

(1) establish relationships between the meteorological conditions at the plant and concurrent power production,

(2) identify and correct systematic errors, and

(3) provide current and recent atmospheric conditions to initialize the forecast process.

The data are useful for the first and second purposes on all time scales of forecasting. However, the usefulness of data for the third purpose varies substantially with forecast look-ahead period. Some providers advocate that successful forecasts can be made with only power generation data. However, experience shows that although these data are extremely valuable, meteorological observations provide significant added value. For example, when plant output is near rated capacity, power data alone will not indicate whether or not the wind conditions are

near the plant's cut-out speed. Thus, the inclusion of meteorological observations to the data requirements is strongly recommended.

The role and importance of the meteorological data varies depending on the time scale of the forecasts, the meteorological conditions at a particular time and the geophysical characteristics (terrain topography etc.) of a particular site. The reason for such variability is that the information that determines the variation of the wind at a point, such as a wind plant, comes from an atmospheric volume of increasing size as the forecast look-ahead period increases. In the very short term (0-6 hours), the atmospheric features that determine most of the evolution of the wind at the wind plant are the small-scale features (such as sea breezes, mountain-valley circulations, etc.) near the facility.

The same concepts apply to day-ahead forecasts but the time and space scales are much different. The critical information for day-ahead forecasts is typically contained in a large atmospheric volume located hundreds of kilometers away at the time the forecast is produced. Thus, the local information from the area surrounding a wind plant is not of much direct value in the day-ahead forecasting process. The most valuable data for very short term forecasts is from the wind plant and its vicinity.

A lower cost and lower risk approach than erecting new towers is to deploy meteorological sensors at one or more sites with existing or new met towers that extend at least to a height that approximates the hub height of typical modern turbines. The issue is where to locate these sensors. One approach is to site them at locations with towers that already exist for other purposes. This strategy may reduce the cost but, except in some fortuitous situations, is not likely to maximize the forecast benefit from a particular set of sensors.

A much better approach is to perform a numerical simulation study to identify the sites that yield the optimal forecast benefit for a particular level of expenditure and forecast application. In such a study, high-resolution physics-based simulations are executed to characterize the flow in the extended vicinity of the wind plant. The output from these simulations is then used to make a map of the time-lagged correlation between meteorological parameters at all the locations in the simulation domain and winds at the plant site. The time lag used in this analysis is set equal to the desired forecast look-ahead period. The resulting maps can identify the best sites to make meteorological measurements for a particular look-ahead period. It is likely that different sites will be best for different look-ahead periods and that more than one site will be needed for a particular look-ahead period to account for varying atmospheric conditions.

Off-site measurements should not be considered as an alternative to wind plant measurements for very short-term forecasts. A network of off-site sensors may provide valuable input for very short-term forecasts at some locations. However, at other locations, sites that represent a concentrated source of predictive information for a particular wind plant may not exist (i.e. the information is scattered over many sites depending on the weather regime). The cost effectiveness of the off-site sensors can vary substantially due to a wide variety of economic, meteorological, and wind plant location factors. It is best to perform a numerical simulation study to determine the sites with the highest benefit/cost ratio or even if sites exist with acceptable benefit/cost ratios.

The day-ahead forecast application presents a different issue. Sensors deployed at the wind plant or even its extended vicinity will have little or no beneficial impact on day-ahead wind

forecast performance. Sensors at wind plants will still be valuable for establishing the relationship between the atmospheric conditions and the power production and for reducing systematic errors in the forecasts, but off-site measurements in the vicinity of a wind plant will have little direct value for day-ahead forecasts. However, such sensors may have some value in analyzing day-ahead forecast performance and determining how the forecast system (especially the physics-based models) can be improved.

4.8.1. Data Collection

The successful operation of a centralized wind power production forecast system requires high quality data collection as well as timely and secure communication of input data for the forecasting process and forecasts that result from this process. The exact nature of the data collection and data communication requirements will depend upon the specific objectives and design of the forecast system.

4.8.2. Categories of Information Required

There are two categories of information required from the wind plant: wind plant parameters and meteorology. The wind plant parameters must include a general description of the plant specifications (provided initially) and a quantification of operating conditions (provided continuously at specified intervals). These data should include the following parameters:

Specifications:

- Nameplate capacity
- Turbine model
- Number of turbines
- Turbine hub height
- Coordinates and elevation of individual turbines and met structures (towers or masts) [7]

Operating Conditions:

- Wind plant status and future availability factor
- Number or percentage of turbines on-line
- Plant curtailment status
- Average plant power or total energy produced for the specified time intervals
- Average plant wind speed as measured by nacelle-mounted anemometers
- Average plant wind direction as measured by nacelle-mounted wind vanes or by turbine yaw orientation

The operating condition data should be provided at intervals that are equal to or less than the intervals for which the forecast is desired. Evidence suggests that providing data at shorter intervals than the desired forecast period may be beneficial for very short-term forecast performance. For example, if short-term forecasts are desired in 15-minute intervals, then operating condition data should be provided at intervals of 15 minutes or less. Ideally, the interval should be at most one half the forecast frequency or more often.

The meteorological parameters should consist of a general description of the meteorological measurement system(s) (provided initially) and the monitoring of ongoing environmental

conditions (provided continuously at specified intervals). The parameters should be measured at a separate on-site met structure (tower or mast). More than one met structure is often beneficial for wind plants spread over large areas. A rough guideline is that each turbine in the wind plant should be within 5 km of a met structure. However, it is challenging to give exact spacing criteria as they depend on factors such as local weather regimes, terrain complexity, and availability of nacelle data. If nacelle data are provided, fewer met towers would be needed and only one may be sufficient. Thus, the recommended number and location of met towers should be based on weather regimes, terrain complexity, and availability of nacelle data.

In general, the met structures should be located at a well-exposed site generally upwind of the wind plant and no closer than two rotor diameters from the nearest wind turbine. The following parameters should be provided.

Meteorological Structure (Tower or Mast) Specifications:

- Dimensions (height, width, depth)
- Type (lattice, tubular, other)
- Sensor makes and models
- Sensor levels (heights above ground) and azimuth orientation of sensor mounting arms
- Coordinates and base elevation (above mean sea level)

Meteorological Conditions:

Data parameters required at two or more levels:

- Average (scalar) wind speed (m/s +/-1 m/s)
- Peak wind speed (one-, two-, or three-second duration) over measurement interval
- Average (vector) wind direction (degrees from True North +/- 5 degrees)

Data parameter required at one or more levels:

- Air temperature (°C +/1 °C)
- Air pressure (HPa +/- 60 Pa)
- Relative humidity (%) or other atmospheric moisture parameter

Wind measurements on the met structure should be taken at two or more levels, with the levels at least 20 m apart. One level should be at hub height. If this level is not feasible, the closest level must be within 20 m of hub height. To improve data quality and reliability, sensor redundancy for wind speed measurement at two levels should be practiced. The redundant wind speed sensor at each applicable level should be mounted at a height within one meter of the primary speed sensor. It is also recommended that at least one of the wind speed sensors nearest the hub-height level be heated to prevent ice accumulation from affecting the accuracy of wind speed measurements.

The meteorological condition data should be provided at intervals that are equal to or less than the intervals for which the power production forecast is desired. For example, if short-term power production forecasts are desired in 15-minute intervals, then meteorological condition data should be provided at intervals of 15 minutes or less. It is also useful if the met data uses the same interval as the generation data or a factor of the interval (e.g. 5 minute met and 15 minute generation data, but not 10 minute met and 15 minute generation data).

In addition to data from the met structure, wind speed and direction data (as well as temperature and pressure if available) from nacelle-mounted instruments should be provided from a representative selection of turbines. Each turbine should be within 75 m in elevation and five average turbine spacings of a turbine designated to provide nacelle data.

4.8.3. Timely and Secure Communication

All operational wind plant and meteorological conditions should be recorded and communicated by a central computing system (e.g., wind plant supervisory control and data acquisition system, or SCADA). This process will also ensure that the date and time stamps associated with the different parameters are concurrent. The wind plant SCADA system should have adequate computational and storage capabilities along with real time high-speed access to the Internet. These capabilities will empower the system to automatically generate and archive the requested operational information and make it available for use by the forecast provider and ISO. The required frequency of data retrieval will depend on the types of forecasts to be produced. If only day-ahead forecasts are required, it is satisfactory for the data to be transmitted from the plant once per day. In general, short term forecasts are recommended but such a need must be determined by ISO operations. If short-term forecasts are required, then the data must be transmitted at a frequency equal to or less than the forecast update frequency.

A key issue in the performance of wind power production forecasts is the consistent availability of high quality production and meteorological data from wind plants. Experience indicates that the issue has emerged as one of the biggest obstacles to achieving optimal forecast performance. Thus, it is prudent to consider ways in which a high level of data availability and quality can be achieved when designing a forecast system. One important factor is the complexity of the mechanism that communicates data from the wind plants to the forecast provider. Complex protocols or communication schemes provide more opportunities for data transmission failure. Initiation and maintenance of these schemes requires considerable education of all concerned personnel.

Another important factor is the incentive that wind plants have to maintain their wind forecasting related sensor and communication systems. A significant issue in other wind power production forecast applications has been the priority that wind plants place on responding to problems with their meteorological sensor or data communication systems. In some cases, the data flow has been interrupted for a week or more because a computer system needed to be rebooted and no one executed the appropriate command during that period. Thus, data outages that could have easily been limited to hours were extended to more than a week. This issue suggests that a centralized wind power production forecast system should be designed in such a way as to maximize the incentive of wind plants to maintain their sensor and communications equipment and to respond to problems with these systems as quickly as possible.

4.9. CENTRALIZED (ISO) VS. DECENTRALIZED FORECASTING SYSTEM

One of the most basic issues is whether the forecasts should be provided through a centralized or decentralized forecasting system. In a purely *centralized* system, one (or more) providers are contracted through a single central entity (such as the ISO) to provide forecasts for all wind generation facilities within the electric system. The central entity may then provide the forecast

information to the individual wind generation resources as well as use the information for its own purposes. In a purely *decentralized* system, each wind generation resource would contract with a forecast provider or potentially produce forecasts internally without a provider. Each generation facility would then supply the forecast (schedule) to the system operator. Both centralized and decentralized systems have advantages and disadvantages but it is certainly possible to have a hybrid approach that incorporates elements of both.

A primary factor is cost. A centralized system is likely to have a lower total cost since the economies of scale would likely enable a provider to deliver forecasts with a lower cost per generation facility. However, it is possible that decentralized costs might approach those of a centralized system if one or two providers were the dominant suppliers for the individual generation facilities and could thereby achieve economies of scale. Of course, there would be no assurance of this outcome if a decentralized system were implemented.

A second factor is forecast quality. Forecasts for larger plant aggregates will tend to be more accurate than those for a single one and forecast providers would have more data from all wind sites. It is not clear which approach (if either) would achieve a better overall forecast performance. In theory, the decentralized approach would encourage a forecast provider to focus more attention on each individual site and possibly develop a higher degree of customization for the site. If the provider did not perform well for that site, the owner/operator of the facility could seek another provider to improve performance. If all owner/operators aggressively sought the best possible forecasts for their site, it could result in the best system-wide forecast as well. However, in practice, there would likely be a large degree of variation in the demand for quality performance for each facility.

Some facilities might pay a lot of attention to this aspect while others might see it advantageous to reduce costs by going with the least expensive provider (regardless of quality) or may even do forecasts themselves. The implementation of system-wide forecast performance standards or penalties for poor scheduling performance might result in the best possible forecasts for each site. However, if the motivation is solely to avoid penalties or meet a minimal performance standard, it is not likely that the owner/operator would be willing to incur an added cost to achieve better performance beyond the minimum standard.

A third factor is data utilization. In a centralized system, it is likely that data from all wind generation facilities will be available for use in forecast generation at other facilities. This attribute can occasionally have significant benefit for short-term forecasts since data from an “upstream” facility might be a useful predictor for future variations at a “downstream” facility. In a decentralized system, it is likely that proprietary issues will prevent a vendor from using data at one facility to benefit forecasts at another facility even if both use the same forecast provider. The situation would be even more difficult if the facilities used different forecast providers [4].

A centralized system will probably ensure more uniform quality. It is also possible that benefits of site-specific customization will not be very significant and that much of the useful customization will be similar at nearby sites. In practice, most customization benefits for individual sites occur for the very short-term look-ahead periods. The centralized system also provides more opportunity to implement a multi-forecaster ensemble since two or more providers could forecast for all generation facilities. This scenario is unlikely to occur in a purely

decentralized system. The recommendation is for ISO-NE to implement a centralized forecasting system.

4.10. USE OF MULTIPLE WIND FORECAST VENDORS

There are likely several advantages of using multiple vendors in order to improve the overall confidence in wind power forecasts. One advantage is that certain vendors may employ methods that are better at forecasting for certain time periods. Some vendors may be better at forecasting for certain meteorological situations or seasons. Having multiple forecast vendors gives the ISO an opportunity to select the best single performer for a given situation or create an ensemble of forecasts based on the time period or forecast situation. The final product could be either the single best forecast or a weighting of individual forecasts.

In order to take maximum advantage of multiple providers, the ISO would need to track and compare vendor performance. At a minimum, the evaluation should include vendor performance over various forecast time periods and months to identify specific trends. More sophisticated evaluation methodologies should also be considered. For example performance tracking could be done by meteorological regime (weather pattern). This type of evaluation would be relatively complex to set up but it could yield significant forecast improvements.

Using multiple vendors also gives the ISO redundancy, thus reducing the possibility of a missed forecast. Although a missed forecast should be rare for even one vendor, the redundancy provided by multiple vendors gives the ISO a higher level of reliability than having a single provider. The disadvantages caused by multiple vendors are added cost and increased management overhead. In addition, providers using similar methods will likely produce forecasts that are highly correlated. In this case, multiple forecasts with very similar performance metrics may provide little added value.

Many markets, both in the U.S. and Europe, are now using multiple forecast providers. In Germany, four providers are used to support their power distribution network (grid) operators. AWST recommends using a two-provider centralized system. This configuration ensures a higher level of reliability due to additional redundancy and facilitates the use of ensemble forecasts that, in theory, are likely to have better overall performance than a single forecast. It is also possible that one provider will perform best under some circumstances. Two providers may ensure that the system is quickly updated with new forecasting technology, since there will be some element of competition between the providers. Although more than two providers might be considered, especially if different forecasting methodologies are used, the benefits obtained from additional forecast providers are not likely to justify the cost.

4.11. PROPOSED CONTROL ROOM INTEGRATION OF WIND POWER FORECASTING

The use of wind forecasting in the power system control room will reduce operational impacts and costs. The addition of wind energy to a power system grid will increase the amount of variability and uncertainty in net load as compared to the use of energy produced by conventional means. Accurate weather forecasts can reduce the uncertainty, thereby allowing for more cost efficient use of conventionally produced energy. As the penetration of wind into

the power markets increases, the need for a sophisticated integration of wind forecasting for the ISO also increases. The ISO requirements for high reliability and safety make this integration especially challenging. The following factors should be considered when integrating wind power forecast systems into the control room:

- **Routine forecasts:** Routine forecasts would be provided for three look-ahead periods, very-short term, short-term and medium range term.
- **Ramp Warning Forecasts:** A separate ramp potential warning system would be part of the forecasting system. When there is a high probability of a ramp within 24 hours, the system would provide hourly ramp alert updates, giving detailed forecasts that would include the probability, amplitude (magnitude), duration, type, and cause of the ramp event. The day-ahead and beyond forecasts would only provide probabilities of ramp occurrences.
- **Severe Weather Forecasts:** A severe weather warning system would provide the potential for events such has high winds, thunderstorms, icing, and heavy snow for at least the first 48 hours. When there is a potential for severe weather within 24 hours, the warning system would deliver hourly updates to operators. For the day-ahead, only the general potential of high, moderate, or low risk would be provided for each category of severe weather.
- **Offshore Forecasting:** In addition to all other forecasts that onshore plants would need, a wave forecast is critical for offshore plants in order to help schedule plant maintenance.
- **Monitoring:** To enhance both safety and reliability, an operator should be dedicated to the monitoring of all of the renewable (variable) power generations resources (primarily wind and solar).
- **Visualization Tools:** User friendly visualization would be needed for the proper monitoring of events that could cause ramp and/or severe weather impacting individual plants and the grid as a whole.
- **Plant Clustering:** It is suggested that pooling of wind plants into clusters will make it easier for an optimized integration of wind power. The geographically distributed clusters would be treated as one large (virtual) wind power plant. The plant cluster could be viewed as a "super plant". For this purpose, it is suggested that all wind plants that are directly or indirectly connected to one transmission network node will be associated with one wind plant cluster. A wind plant cluster manager would assist the ISO by operating the cluster according to the requirements of the power generation and transmission system. This approach would have particular value if there were transmission congestion in an area that might require curtailment when a specific aggregate of plants exceeded threshold output.
- **Education and training:** During the early stages of integration of renewable (variable) power generation resources with traditional power systems, there is a large need for education and training on how to use wind forecasting effectively. Training topics should address a number of areas such as interpreting error characteristics for deterministic versus probabilistic forecasts of ramps and/or other events. The discussion

should cover the overall forecasting process and a high level review of physical versus statistical models as well as the use of observational data for validation and correcting model biases.

4.12. SUMMARY

Conventional power plants produce a near-constant output except in rare emergency outages, but the variability of wind energy presents a special challenge for utility system operations. The output of a wind plant fluctuates, at times amounting to several hundred megawatts in a matter of an hour or two. If the fluctuations cannot be predicted, they create reliability risks and additional costs for the electricity system and consumers. Wind generation forecasting is an important tool for reducing the effects of wind generation variability and uncertainty on operation of the grid.

In wind energy forecasting it is useful to divide the forecasts into three time scales: (1) very short-term "next-hour" (0-6 hrs); (2) short-term "day-ahead" (6-72 hrs), and (3) medium range (3-10 day). The skill in very short-term forecasting is related to the prediction of small-scale atmospheric features (< 200 km in size) in the vicinity of the wind plant. A major challenge is that there is usually very little data gathered on the scale needed to support the forecasting of very short-term features. There are a wide range of spatial and temporal scales that determine the variations in the wind energy power generation, so it is necessary to use a diverse mix of data sources to achieve the best possible forecast performance.

The main problem with data beyond plant boundaries is that the spacing between measurements is too large (because of economic constraints) to adequately represent the small or even sometimes medium scale atmospheric features that are responsible for short-term variations in wind energy output. Unfortunately, there are large areas where very little in situ data are gathered due to the cost of maintaining such systems. As a result, data coverage is far from uniform and some regions have far less data upstream than others. The expectation is that remote sensing technology will eventually overcome these limitations of data resolution and coverage.

A major component of the forecast process is data processing. Data processing tools known as mathematical or numerical models ingest data and generate predictions. The four fundamental categories used in the wind energy forecasting process are: (1) physical atmospheric models, (2) statistical atmospheric models, (3) wind plant output models, and (4) forecast ensemble models. There are many types of models in each of these major categories and a particular forecast system may employ one or more of each type.

Evaluation of the forecasts is a very important yet complex process. The most significant issue is which parameter(s) should be used as the metric(s) for forecast performance. The choice of metrics can have a significant impact on the interpretation of forecast performance. One fundamental distinction in using metrics is absolute versus relative performance. A second distinction is the sensitivity to different portions of the error frequency distribution. Some parameters are much more sensitive to outliers, i.e. forecasts with anomalously large or small errors. A third issue is that a forecast system can be tuned to produce better performance for a specific metric while possibly degrading the performance for other metrics.

The current state-of-the-art forecasting techniques exhibit considerable skill in both very short-term and short-term forecasting. Very short-term hourly forecasts typically outperform persistence by 10% to 30%. Short-term hourly forecasts usually outperform persistence and climatology by 30% to 50%. At present, for the medium range past day 5, hourly forecasts typically do not outperform climatology so have limited usefulness. However, medium range forecasts of the *average* energy production over a day or half-day usually outperform climatology out to 6 or 7 days thus providing some value. The MAE of very short-term forecasts is typically in the range of 5% to 15% and the errors increase rapidly (about 1.5% of installed capacity per hour) with an increase in the forecast time horizon. After the short-term period, the error growth rate decreases to about 0.1% of installed capacity per forecast hour. This trend indicates that the mean absolute forecast errors remain in the 13% to 21% range for 1 to 2 days ahead and rise to the 20% to 25% range (that is typical of a climatological forecast) after about 3 days.

Forecast performance can vary substantially (5% or more of installed capacity) as a function of location, season, weather regime, and size and diversity of the wind plants. Much of this variability is related to the predictability of specific weather regimes, with some sensitivity to small variations in conditions at the time of the forecast. Forecast performance in these types of regimes is normally much worse than for regimes with less sensitivity.

Studies have also shown that size and diversity of wind plant aggregation can impact forecast statistics. For example, in the Alberta Wind Forecasting Pilot Project the RMSE for regional day-ahead forecasts were 15-20% lower than for the individual farms and the RMSE for system-wide day-ahead forecasts was 40-45% lower than for the individual farms.

In the next 10 years, it is expected that improvements in (1) the quality and quantity of global, regional, and local area atmospheric data, (2) sophisticated statistical and physics-based atmospheric models and data assimilation schemes, and (3) the availability of lower cost computing power will yield substantial improvement in forecast performance. Although there is likely to be some improvement in all forecast time horizons, the most significant improvements are likely to be in the start of the medium range forecasting period (3-5 days) and the start of the short-term forecast period (first 6-18 hours).

As the amount of wind generation increases on grid systems, the occurrence of large and rapid changes in power production (ramps) is becoming a significant grid management issue. Forecasting techniques for typical wind conditions do not do well in forecasting rapid changes in winds that cause large power ramps. Therefore, ramp forecasting requires a separate methodology and system designed specifically to forecast and alert operators of the likelihood of ramp events. Several different types of meteorological processes cause large ramps in wind power production. The data and type of forecast method required to optimally predict each type of ramp event varies.

A ramp forecasting system should alert operators about the occurrence of a ramp at the earliest possible time. Forecasts for the first 24 hours should include the probability, amplitude (magnitude), duration, type and cause of the event. The alert system should include hourly ramp forecast updates when a ramp event has been forecasted within 24 hours. For the day-head, only probabilities of ramp occurrence should be given for each hourly time period. For the medium range forecast, only daily ramp probabilities should be given.

Both power production data and meteorological data play an important role in the generation of high quality wind power production forecasts. The successful operation of a wind power production forecast system requires well orchestrated data collection plus timely, secure communication of the input data for the forecasting process and the resulting forecasts. Two categories of data are required from the wind plant: wind plant parameters and meteorology. Data outages have an adverse impact on forecast performance, especially for the very short-term look-ahead periods.

The data from a wind plant serves three purposes in the forecasting process: (1) it provides information about relationships between the meteorological conditions at the plant and the plant's concurrent power production; (2) it provides information to determine the systematic errors in the forecasts and allows them to be statistically corrected, and (3) it provides information about the current and recent state of the atmosphere which contributes to the starting point of the forecast process. Meteorological sensors should always be present at wind plants to fulfill objectives (1) and (2) above. Off-site measurements should never be considered to be an alternative to wind plant measurements for the very short-term forecasts. The usefulness of data for the third purpose varies substantially with the forecast look-ahead period.

To maximize the performance of very short-term forecasts, it is important to gather as much information as possible in the vicinity of the wind plant. The day-ahead forecast application presents a different issue. Thus information and data needed to make day-ahead forecasts must primarily come from simulations using a physics-based atmospheric model. Sensors deployed at the wind plant or its extended vicinity have little impact on making day-ahead wind forecasts, but are valuable for evaluating the day-ahead forecast performance and determining how the forecast system can be improved.

There is a need to provide operators with information regarding the overall weather situation, especially with respect to extreme meteorological events that may have a serious impact on wind plant operations. Information and forecasts of severe weather events, such as high winds, thunderstorms, and freezing rain should be provided. Information on the feature causing the event should also be provided so operators can track and verify the actual occurrence of the event in real time.

Offshore wind plants will require wind, wind power and wave forecasts that can impact various operations. There are fundamental differences between the wind conditions over land and offshore due to the influence of the surface on the flow. Forecast models must be able to account for ocean-atmosphere interactions, the specific nature of the marine boundary layer, and the fact that observed data will be sparse over the ocean. The wave-forecast model needs to include relevant shallow water dynamics.

Two basic interrelated issues for the ISO to address are selecting between (1) a centralized or decentralized forecasting system and (2) a single or multiple vendor forecasting service. The recommended approach is to implement a two-provider centralized system. This strategy ensures a higher level of reliability due to the redundancy and increases the likelihood of improving the forecast performance over a single provider.

The use of wind forecasting in the ISO control room will likely reduce operational impacts and costs. For optimum management of wind power, it is essential that the wind power forecasting system be fully integrated into the ISO control room. It is suggested that pooling of wind plants

into clusters may make it easier for an optimized integration of wind power. It would likely improve grid management efficiency if an operator were dedicated to the monitoring of all of the renewable (variable) power generation resources. Finally, an aggressive training program for all users of forecast information would likely improve the management of the wind resources.

4.13. REFERENCES

[1] McKay, D., 2008: Wind power forecasting pilot project Part B: The quantitative analysis final report. ORTECH report to the Alberta Electric System Operator (AESO).

[2] California Wind Energy Forecasting System Development and Testing Phase 2: 12-Month Testing, EPRI, Palo Alto, CA, and the California Energy Commission, Sacramento, CA: 2003, 1007339.

[3] Lange, B., I. Waldl, A. Guerrero, and R. Barthelmie, 2003: Improvement of the wind farm model FLaP (Farm Layout Program) for offshore applications. *Offshore Wind Energy in Mediterranean and Other European Seas.* Naples, April 2003.

[4] Barthelmie, R. J. 2002: Understanding the wind regimes of offshore windfarm sites. *Wind Engineering*, **25(5),** 261-262.

[5] Kalnay, E., S. J. Lord, and R. D. McPherson, 1998: Maturity of operational numerical weather prediction: medium range. *Bulletin of the American Meteorological Society*, **79**, 2753-2769.

[6] Westrick, K., 2003: Windpower Conference Proceedings, American Wind Energy Association.

[7] Meteorological Masts and Towers, New York State Energy Research & Development Authority Report, Albany, NY October 2005.

Section 5

GRID OPERATIONS WITH SIGNIFICANT WIND GENERATION

Experience with wind plants from the power system operator's perspective is developing but still rather limited. In the U.S., there are only a handful of areas where the penetration of wind generation has reached the level where operating practices have necessarily evolved in response. ERCOT is perhaps the best example, although the Pacific Northwest, Colorado, Alberta, and New Mexico are not far behind. Continued development over the coming years will bring many more operating areas into this category. MISO might be the best example here. The current installed capacity of around 6 GW is small relative to the resources and loads in its market. However, the concentration of wind generation in the western reaches of the market footprint and prospects for much more development have placed a priority on developing the practices, procedures, and policies that will be critical going forward.

Wind integration studies conducted over the past decade have lead to insights that are proving useful for anticipating challenges for operating power systems with large amounts of wind generation, and for assessing the effectiveness of various measures for mitigating impacts. While some general lessons have been learned, the studies have also shown that the make-up of a particular system – portfolio of resources, nature of loads, amount and location of wind generation, operating rules – has a substantial impact on the magnitude of the challenge.

Actual progress – as measured by the performance of wind plants in the field – is perhaps greater on the interconnection side of the ledger. As illustrated in Section 3 commercial wind turbine technology has advanced considerably in technical capability. Wind plants have been successfully interconnected in very remote and weak areas of the transmission network. With proper engineering, wind plants can exhibit terminal behavior equivalent to conventional power plants in terms of reactive power and voltage control. In some respects, the dynamic behavior of wind generation facilities during and immediately following large disturbances on the transmission network can be superior to that of conventional equipment. Substantial work remains, however, on the development, testing, and validation of the computer models required for this engineering.

The subject of this section is on the design and operation of power grid with significant wind generation, with those responsible for maintaining the very high reliability and economic efficiency the target audience. Topics and information from the previous sections are relevant here, but from the perspective of those with overall responsibility for the grid.

5.1. BACKGROUND

Concerns over how significant amounts of variable wind generation can be integrated into the operation of a control area stem from the inability to predict accurately what the generation level will be in the minutes, hours, or days ahead. The nature of balancing area operations in real-time or in planning for the hours and days ahead is such that increased knowledge of what will happen correlates strongly to better strategies for managing the system. Much of this process is already based on predictions of uncertain quantities. Hour-by-hour forecasts of load for the next day or several days, for example, are critical inputs to the process of deploying electric generating units and scheduling their operation. While it is recognized that load forecasts for future periods can never be 100 percent accurate, they nonetheless are the foundation for all of the procedures and processes for operating the power system. Increasingly sophisticated load forecasting techniques and decades of experience in applying this information have done much to lessen the effects of the inherent uncertainty.

The nature of its fuel supply is what distinguishes wind generation from more traditional means for producing electric energy. The electric power output of a wind turbine generation is primarily a function of the speed of the wind passing over its blades. The speed of this moving air stream exhibits variability on a wide range of time scales – from seconds to hours, days, and seasons. The degree to which these variations can be predicted with some level of accuracy also varies. It should be noted that this is not an entirely unique situation for electric generators. Hydroelectric plants, for example, depend on water storage that can vary from year to year or even seasonally. Generators that rely on natural gas as their sole fuel source can be subject to supply disruptions or storage limitations. That said, the overall effects of the variable fuel supply are significantly larger for wind generation.

Impacts on the operation of the transmission grid and the control area relative to wind generation are dependent on the performance of the wind plants within that area as a whole, as well as on the characteristics of the aggregate system load and the generation fleet that serves it. Large wind generation facilities that are connected directly to the transmission grid employ large numbers of individual wind turbine generators. Individual wind turbine generators that comprise a wind plant are usually spread out over a significant geographical expanse. This has the effect of exposing each turbine to a slightly different fuel supply. This spatial diversity has the beneficial effect of “smoothing out” some of the variations in electrical output. The benefits of spatial diversity are also apparent on larger geographical scales, as the combined output of multiple wind plants will be less variable than with each plant individually.

The system load itself exhibits some unpredictable variations, both within an hour and over the course of the day. Because system operators are concerned with the balance of net load to net generation in their control area, load and wind variations cannot be considered separately. The impact of uncorrelated variations in load and wind over time will be considerably less than the arithmetic sum of the individual variations. This aggregation effect is already a critical part of control area operations, as responding to or balancing the variations in individual system loads, rather than the aggregate, would be exorbitantly complicated and expensive, as well as non-productive.

Wind generation forecasting is acknowledged to be very important for continued growth of the industry. Despite the increasingly sophisticated methods used to forecast wind generation, and

the improving accuracy thereof, it is certain that large amounts of wind generation within a grid control area will increase the overall demand for ancillary services.

5.2. MAJOR LESSONS LEARNED FROM U.S. WIND INTEGRATION STUDIES

Within the wind industry and for those transmission system operators who now have significant experience with large wind plants, the attention has turned to not whether wind plants require such support but rather to the type and quantity of such services necessary for successful integration. With respect to the full range of ancillary services, there is a growing emphasis on better understanding how significant wind generation in a control area affects operations in the very short term – i.e., real-time and a few hours ahead – and planning activities for the next day or several days.

Recent studies considering the impact of wind generation facilities on real-time operation and short-term planning for various control areas are summarized in Reference [1]. The methods employed and the characteristics of the power systems analyzed vary substantially. There are some common findings and themes throughout these studies, however, including:

- Despite differing methodologies and levels of detail, ancillary service costs resulting from integrating wind generation facilities are relatively modest for the growth in U.S. wind generation expected over the next three to five years.
- The cost to the operator of the control area to integrate a wind generation facility is obviously non-zero, and increases as the ratio of wind generation to conventional supply sources or the peak load in the control area increases.
- For the penetration levels considered in the studies summarized in the paper (generally less than 20 percent by capacity) the integration costs per MWH of wind energy were relatively modest. As penetration levels begin to approach 20 percent by capacity, however, the costs begin to rise in a non-linear fashion.
- Wind generation is variable and uncertain, but how this variation and uncertainty combines with other uncertainties inherent in power system operation (e.g. variations in load and load forecast uncertainty) is a critical factor in determining integration costs.
- The effect of spatial diversity with large numbers of individual wind turbines is a key factor in smoothing the output of wind plants and reducing their ancillary service requirements from a system-wide perspective.

Understanding and quantifying the impacts of wind plants on utility systems is a critical first step in identifying and solving problems. A number of steps can be taken to improve the ability to integrate increasing amounts of wind capacity on power systems. These include:

- Improvements in wind-turbine and wind-plant models
- Improvements in wind-plant operating characteristics
- Carefully evaluating wind integration operating impacts
- Incorporating wind-plant forecasting into utility control-room operations

- Making better use of physically-available (in contrast with contractually-available) transmission capacity
- Upgrading and expanding transmission systems
- Developing well-functioning hour-ahead and day-ahead markets, and expanding access to those markets
- Adopting market rules and tariff provisions that are more appropriate to weather-driven resources
- Consolidating balancing areas into larger entities or accessing a larger resource base through the use of dynamic scheduling
- Improving the operational flexibility of the entire conventional generation fleet. This includes mechanisms to encourage use of and investment in thermal and hydro generation for increased flexibility.

5.3. ASSESSING SPECIFIC OPERATIONAL ISSUES RELATED TO WIND GENERATION

Integration encompasses the influence of wind plants on and participation in short-term scheduling and real-time operations of the ISO-NE system. Included are the nature of wind energy delivery in real time and the control thereof, mechanisms for coordination of wind plant operation with ISO-NE system operators, and the collection and communication of important operational data.

The findings from previous integration studies of other regions are generally applicable because they directly address issues stemming from variability and uncertainty associated with wind generation. For a specific balancing authority, they may or may not be applicable or possible. Detailed studies, like one initiated by ISO-NE in 2009, are the mechanisms for identifying operational issues and challenges in a given context.

A discussion of specific operational issues related to wind generation follows.

5.3.1. Variability and Uncertainty

As mentioned above, electric demand is highly variable and forecasts have varying levels of uncertainty depending on the time of day or year and the horizon. Wind generation will incrementally increase both of these characteristics.

5.3.1.1. Real-Time Variability

Generation capacity on AGC and assigned to regulation duty is the primary means for matching generation to load in real-time. Over longer periods, sufficient ability to adjust generation up or down in response to trends in the balancing area demand – e.g. morning and evening ramps – must be maintained. Wind generation increases these requirements.

Previous studies are finding that while the output of a wind plant (or multiple plants) exhibits variations across all time scales ranging from seconds onward, the fastest of these fluctuations (tens of seconds) are modest compared to those already exhibited by load. Wind plant output variations on this time scale have been characterized from measurement data as normally-

distributed random deviations from a rolling average trend (with an averaging window of 20 to 40 minutes). For a 100 MW wind plant, the standard deviation of the variations is about 1% of the nameplate rating. In addition, the variations from an individual wind plant are uncorrelated to the variations from other plants and from those in the load, which leads to a substantial statistical smoothing effect as the amount of wind generation increases.

System impacts of these variations will obviously depend on the amount of wind generation relative to load, but for the wind penetrations studied to date, the effects are quite modest.

Variations in wind plant output over slightly longer time frames appear to be of more significance for balancing. Electricity demand exhibits a strong and familiar trend over periods of the day, depending of course on season and other factors such as weather. Short-term forecasts of this trend allow flexible generation to be dispatched economically and in advance to "follow" the movement. Fluctuations in wind generation over intervals of five to ten minutes or longer appear not to be so well behaved or predictable. These variations are due to local effects within the wind plant or plants, driven by turbulence, terrain effects, and turbine layout, among other possible factors. Consequently, they are very difficult to predict.

A result is that the errors in the short-term forecast of wind generation will increase the regulation burden, as units following the load via frequent economic dispatch are effectively controlled to the forecast rather than the actual wind.

The analytical approaches employed in wind integration studies have evolved to where it is possible to estimate these impacts on regulation and balancing with the standard data sets developed for these investigations. While not rigorous, it is possible using these techniques to make reasonable estimates of the wind generation impacts on the quantity and quality of flexible resources needed to perform these functions.

5.3.1.2. Extreme Ramps

Large changes in balancing area demand over one or more hours are important periods from an operations perspective. Adequate flexibility in the committed generation – "room to move" – must be available to avoid significant violations of control performance or shedding of load.

Wind generation can enhance these periods of stress on the system by moving in the undesirable direction – down in the morning or up in the evening.

5.3.2. Wind Plant Control

In the future, as wind plants provide an increasing amount of the energy delivered to load, it will become increasingly necessary for them to participate in a more complete range of system operation and control functions, similar to conventional plants. This will be made possible by the increasing capability of wind plant output forecasting systems and the integration of forecasting capability with wind plant control capability in an AGC system. With a fully integrated system, the output of the wind plant can be forecast and scheduled both hour(s) ahead and day ahead, the wind plant can participate in the volt/VAr control system, and it may provide regulating capacity and spinning reserves if called upon to do so. It may also provide a governor response and inertial response if required.

Ramp-rate limits can be set to meet the requirements for specific grids and applications. Ramp-rate limits can be imposed for grid operating conditions that warrant their use, and need not be

continuously enabled. The controller allows for switching in and out of ramp-rate control by either the plant operator or in response to an external command.

Again, with the data sets compiled for wind integration studies, impacts of wind generation on ramping can be examined statistically, and the effects on the system determined through chronological production simulations. The need for, and nature of, mitigation measures can also be identified.

Assessing applications for active power control capabilities of modern wind plants must be approached carefully, since some of the features require that wind energy be dumped. For those features that operate infrequently or for very limited durations, the amount of lost energy may be very small or negligible. Ramping controls for start-up or planned shut-down are in this category. At the other end of the spectrum, full participation in AGC requires that potential wind energy be spilled continuously, and may have a significant impact on project economics.

Economics must be a key factor in decisions to use or require wind plant active power controls.

5.3.3. Effects on contingency reserve requirements

The operating experience to date with wind generation, including the detailed integration studies performed over the past decade show, that while very large changes in wind generation in short amounts of time are possible, seldom if ever would they rise to a level that would meet the current definition of a "contingency" event in the U.S. electric power industry. In fact, at least one reserve sharing group in the West has clarified the definition of contingency to require that it be accompanied by a breaker operation or change in operational status of an element of the bulk grid to explicitly exclude changes in wind generation.

Both experience and meso-scale data show that large changes in production, especially in the aggregate production of many individual wind plants, do not occur instantaneously, but rather over periods of hours. Some relatively extreme cases have already been observed; BPA's challenge with wind generation in the Columbia Gorge, where ramps in aggregate production over periods as short as 30 minutes can be significant, is a prime example. Even here, however, the issue is one of regulation and load following, not contingency reserves.

5.3.4. Minimum Generation Issues and Curtailment

In many parts of the U.S., there is a tendency for wind generation to produce more energy in off-peak hours than on-peak. During light load seasons, high levels of wind production overnight can create problems with minimum generation.

For a defined scenario of wind generation, production simulations can quantify the anticipated frequency and timing of minimum generation constraints. Mitigation measures include de-commitment of conventional units to provide "legroom", or curtailment of wind generation. The ability to quantify the number of hours over a year in which wind generation curtailment might be invoked is a significant benefit of the production simulation approach.

5.3.5. Forecasting Applications and Implementation

Production forecasts are critical for integrating significant amounts of wind generation. The science of wind generation forecasting and modern implementations of forecasting systems is

described in Section 4 The purpose of this section is to provide some additional perspective on the use and implications of those forecasts for power system operation and control.

5.3.5.1. Short-Term Forecasts and Uncertainty

In conventional utility operations, uncertainty about load in the coming minutes and hours translates to additional reserves and regulation. Here the variability and uncertainty of wind plant production become intermingled because it is difficult to accurately forecast short-term variations. Distinguishing between a sharp but temporary drop in production and persistent decline in output that could continue over multiple hours is very difficult. Policies for dealing with normal variations in wind generation must be segregated from those actions that are necessary for the very large and extended but infrequent, changes in production.

5.3.5.2. Longer-Term Forecasts

Wind generation forecast accuracy declines with the forecast horizon. Day-ahead forecast accuracy of 15 to 20% MAE allows for significant hourly and even daily errors. How the forecast is used in day-ahead decision-making is both a technical and economic question: Adequate capacity must be available to meet the expected load, but committing excess capacity degrades economic performance.

The difficulty of the apparent trade-off between security and economic efficiency will depend on the amount of wind generation and the type of resources in the supply portfolio. Integration studies can help to quantify the sensitivity of economic efficiency to the accuracy of wind generation forecasts or the penalty associated with discounting the expected wind generation in a security-constrained unit commitment (SCUC).

The question of economic efficiency also extends to the structure and rules for day-ahead energy markets. There is little experience to date from other ISOs on how wind plays or is required to play in the bidding process, but it has been recognized in those market areas where significant wind generation is anticipated. Consideration of wind energy delivery for the next day should increase the efficiency of the day-ahead market process, but the likely errors due to expected day-ahead wind generation forecast errors must be acknowledged.

5.3.5.3. "Special" Forecasts

Large changes in wind generation over relatively short periods of time are infrequent but can pose serious risks to system reliability. Advance knowledge of such events is the difference between posturing the system defensively thousands of hours per year and incurring the associated cost, or taking appropriate action during only the dozens of hours when there might be risk. The ability to forecast large, sudden changes in wind generation is a key to reducing the cost of integrating wind generation.

As the discussed in Section 4 forecast systems optimized to minimize errors in day-ahead predictions may not be the best approach for predicting large ramps or high-wind cutout events. This fact must be recognized in the development of special forecasts, along with the specific needs and requirements of the operators.

5.3.6. System Steady-State and Dynamic Performance with Wind Generation

The technology for converting energy in a moving airstream to electricity differs significant from that employed in conventional bulk electricity generation. These differences have (and still are)

posing some major challenges for power system engineers charged with designing and maintaining reliable systems. As described in Section 3 commercial wind generation technology is quite sophisticated, and capable of exhibiting terminal behavior and performance consistent with good engineering practice.

The focus of the electric power industry to date has been on detailed design studies for the interconnection of individual wind plants. As the penetration of wind continues to grow, evaluations of system-level impacts will become more important. Specific technical issues that will require assessment include:

- Voltage regulation and reactive power dispatch. Control of reactive power at the terminals of a wind plant can be designed to provide the same levels of static and dynamic control as conventional plants, possiblly even better. This is not an inherent feature of wind plants, however – proper engineering of the plant is necessary to achieve these levels of performance. As the number of wind plants with such capability grows, system level studies will be required to prevent undesirable interactions.
- System behavior during and disturbances. The response of the system to large-signal disturbances such as faults will be affected by wind generation. However, it has been shown that the dynamic behavior of wind plants can possibly be "better" than conventional plants due to the sophisticated generation control technologies in commercial wind turbines. In any case, the responses will be different than those form more familiar conventional generators, which increases the importance of adequate and verified models for wind plants.
- Potential reduction in system inertia. The current installed fleet of commercial turbines is mostly insensitive to excursions in system frequency. If wind generation displaces enough conventional generation, the dynamic performance of the system can be altered. In isolated systems, the lower aggregate inertia results in faster and possibly larger excursions in frequency following loss of generation or load. In a large interconnection, lower regional inertia can adversely affect interties following similar disturbances
- System protection. Wind turbines and wind plants do not fit well into the conventional analytical methodology for calculating short-circuit currents because of the generator and control technologies used. It is important, however, that in-feed from wind plants to transmission system faults be characterized so that transmission line protection can be properly designed. With a modest to large number of wind plants, likely concentrated in a single region, careful assessments of system protection will be necessary, for which understanding of the contributions from wind plants is a pre-requisite.

5.4. Communications Infrastructure for Managing Wind Generation

Most wind plants connected to the bulk power system are of significant size, and therefore visible to system operators. Consequently, communication and some types of control are required to achieve necessary levels of interoperability.

Wind plants constructed over the past decade contain a surprising, to those in the utility industry, amount of internal information technology for data collection, communications, and control. Most plants have a high-bandwidth fiber optic connection from each wind turbine to a main control center. Large amounts of data are collected at very frequent intervals to support functions such as power curve verification and maintenance monitoring. Increasing turbine capabilities are being leveraged by this communication infrastructure to achieve advance levels of performance such as ramp rate control, smart curtailment, and voltage control.

A number of vendors have serviced the wind plant SCADA market over the past two decades, most with proprietary and turn-key systems.

Now that wind generation is a noticeable player in the bulk electric generation picture, the information previously confined to the internal plant IT infrastructure and used almost exclusively for proprietary purposes is of much greater interest to the outside world, namely the operators of the bulk transmission system and wholesale energy markets. How the subset of information that should be shared might be accessed is the relevant question.

Communications for electric utility applications has undergone a very substantial transformation over the past twenty years, and has lead to the development of international standards the promise a new generation of interchangeable pieces and parts that speak a common language.

The legacy development of wind turbines in Germany and Denmark, where individual or small clusters of turbines are connected to public distribution networks and therefore nearly invisible to bulk system operators, inspired a movement to develop a wind energy specific communications standard that builds on the developments mentioned above. The result is the IEC 61400-25 series of standards (Figure 39), each known under the general title "Communications for Monitoring and Control of Wind Power Plants". Key features of the standards series include:

- The standard addresses all communication means between wind power plant **components** such as wind turbines and **actors** such as SCADA systems and dispatch centers.
- Applies to any wind power plant operational concept, i.e., both in individual and integrated operations.
- The application area of IEC 61400-25 covers all components required for the operation of wind power plants including the meteorological subsystem, the electrical subsystem and the wind power plant management system.

IEC 61400-25 defines how to

- model the information,
- perform information exchange,
- map specific communication protocols stacks, and
- perform conformance testing.

The wind power plant specific information given in IEC 61400-25 is built on the common data classes specified in the IEC 61850 series of standards. The standard excludes a definition of how

and where to implement the communication interface and thereby enables any topology to be applied. Specific advantages in application of the standard are that it:

- Provides a uniform communication platform for monitoring and control of wind power plants
- Is compliant with ICCP (Inter-Control Center Protocol)
- Minimizes the communication barriers arising from the wide variety of proprietary protocols, data labels, data semantics etc.
- Provides the ability to manage different wind power plants independently of vendor specific SCADA systems
- Enables components from various vendors to easily communicate with other subsystems
- Is more efficient handling and presentation of information from wind power plants
- Maximizes scalability, connectivity, and interoperability in order to reduce total cost of ownership or cost of energy
- Is a common solution within the wind power area secures availability of products and competence at a lower cost

The standard is designed to support a range of current day applications and provide a platform for future applications not yet defined.

The IEC 61400-25 standards are relatively new, and to the project team's knowledge have yet to be adopted by a RTO or ISO in the U.S. However, at a Wind Generation Forecasting Workshop hosted by the Utility Wind Integration Group in February of 2009, it was indicated by two major vendors in presentations to be a key piece of their EMS platform architecture going forward.

The application of IEC 61400-25 is farther along in Europe. Distribution system connection of wind generation has been a major driver. A majority of the wind generation installed in Germany, for example, is comprised of individual or small groups of turbines connected to the public distribution network. They are mostly invisible to the German grid operators. The IEC 61400-25 standards provide a means for grid operators to communicate directly with individual turbines that comply with the standard.

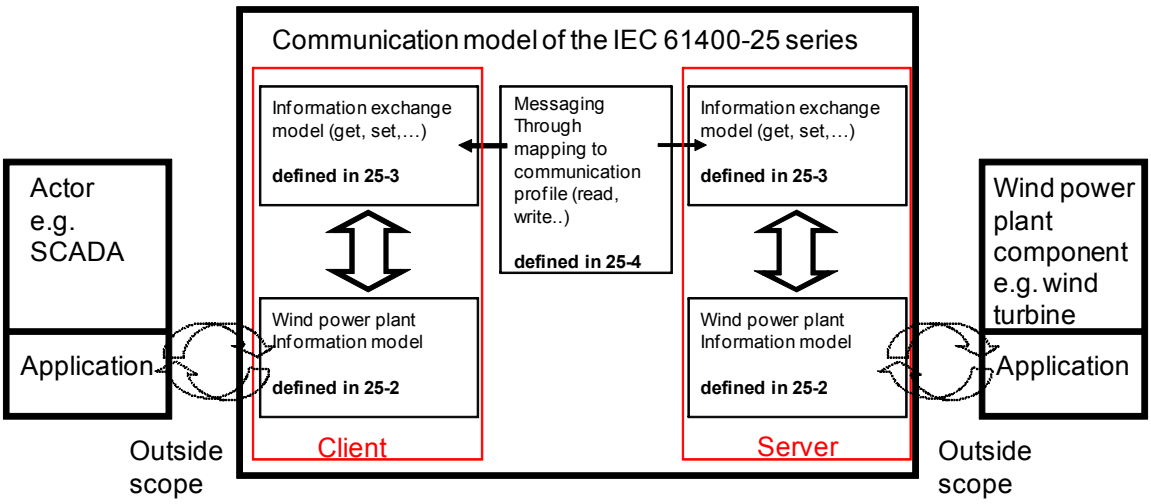

Figure 39: IEC 61400-25 communication model. Actors can include power system control centers and wind generation forecasting systems.

5.5. Operational Considerations for Distributed Wind Generation

Wind generation connected at the distribution system level is generally "invisible" to bulk system operators, but can have impacts if the penetration is large enough on a system or regional level.

The experience in Germany is especially relevant here. The favorable in-feed tariff established by law stimulated the installation of thousands of MW of individual and small groups of wind turbines connected to the public distribution network. Each of these turbines operated autonomously, but the aggregate impact was substantial. As the penetration increased, German grid operators became acutely aware of these impacts when transmission faults lead to the loss of significant amounts of production since turbines at the time were not capable of riding through low voltage events. Bulk system load forecasts became increasingly poor since the aggregate production could not be accounted for. Years of work are now providing solutions, but the situation remains the best illustration of the difficulties associated with substantial distribution system connected generation of any type.

Installations at the distribution level cannot be managed in the same way as bulk wind plants. It is critical for operation of the bulk system, however, to know as best as possible the number of installations, the total capacity by bulk system bus, and the specific geographic location of the individual units. In addition, some knowledge of status is also desirable, but may be difficult to obtain without real-time communications to each unit.

At present, the major bulk system concerns associated with distributed generation are forecasting the aggregate production (possibly by region) and knowing the potential loss of generation for transmission system faults that are observed at the terminals of the individual units.

Provided that status information is available and up-to-date, it should be possible for the bulk system forecasting agent to develop an approximate forecast of production by bulk system bus.

Such forecasts would likely be somewhat less accurate than those for bulk plants, but still reduce the error in the aggregate wind generation forecast.

The sensitivity to bulk system events, especially faults, derives mostly from the assumption that the individual units comply with IEEE 1547, which requires that the units shut down and disconnect from the grid in the event of a voltage disturbance at their terminals. With knowledge of the location and size of the individual generators, bulk system fault studies could be performed to assess the loss of potential distributed generation. The "zone of influence" concept use in voltage sag assessments could be employed here. While not precise, such an approach would at least make some provision for this potentially important bulk system impact.

5.6. Assessing Wind Plant Contributions to Generation Adequacy

Maintaining high levels of electric power system reliability requires that sufficient supply capacity be available to meet demand. Because of lead times associated with the permitting, designing, and constructing new generation resources, planners must look into the future when making this evaluation, using forecasts of future electric demand.

In addition, it must be recognized that individual generating units are not perfectly reliable, and instead are subject to both planned and unplanned outages. The probabilistic nature of both load forecasts for a future year and the likelihood that existing or planned generating units would not be available due to outage necessitates the use of statistics in rigorous assessments of power system reliability.

Perfect reliability would be infinitely expensive, so target reliability levels have been traditionally used to gauge the adequacy of a resource plan for a future year.

Wind generation is primarily a source of electric energy, not capacity. However, because the principal objective of power system planning, engineering, and operations is to assure the necessary high level of system reliability, capacity is a central concept in all of these aspects.

While wind turbines and plants have very high availability, the supply of fuel for driving the turbines is subject to meteorology. Nonetheless, it can be shown by any of the traditional analytical approaches used to measure the contribution of a supply resource to system reliability that the capacity value of wind generation is something greater than zero.

5.6.1. General Approaches for Quantifying System Reliability

LOLP (Loss-of-Load Probability) is the predominant metric in the electric utility industry for assessing the long-term reliability of the bulk power system. It measures, using statistical techniques and calculations, the chance that a projected load on a power system is expected to be greater than the available supply capacity. By securing or building adequate resources - actual generating units, firm capacity imports, interruptible load, etc. – the LOLP of the system can be maintained at or below an acceptable level.

Methods for computing system LOLP take into consideration the historical reliability of specific generating units and de-rating, the nature of load patterns throughout the year or years evaluated, limits on capacity imports from external areas, and energy limitations in certain supply resources like hydro generation.

LOLP is used to characterize the reliability of the bulk power system (BPS), although it does not usually take into consideration specific elements of the transmission network. However, assuming that contingencies are appropriately considered in the design and operation of the transmission system, LOLP will be an indication, though not perfect, of BPS reliability.

In practice, other metrics are used for gauging reliability. Reserve margin - the excess (expressed as a percentage) of total accredited generation capacity over expected load - is another commonly-used to indicate system reliability. In some cases, the required reserve margins are determined from a more detailed LOLP analysis.

5.6.2. Considering Wind Generation in Reliability Evaluations

How wind generation fits into the traditional templates for measuring resource adequacy has been a topic of research and discussion for over 20 years. The National Renewable Energy Laboratory has conducted research into expanding traditional methods for assessing reliability to include consideration of wind generation. Numerous reports and technical papers have been written on the topic ([2][3][4])

Until about ten years ago, the subject was relatively academic, as the total installed capacity of wind both across the country and in any individual operating area was negligible in this regard. In addition, the capacity value question was relatively unimportant, since most wind generation facilities delivered energy under a power purchase agreement to utility purchasers.

The capacity value question did arise, however, in the context of accredited generation capacity for those utilities purchasing wind generation. In many reserve sharing groups, accredited capacity is the metric by which reserve obligations are allocated amongst the participants. Historically, energy-limited resources such as run-of-river hydro were assigned capacity value based on historical energy deliveries during system peak periods. The philosophy behind such accreditation methods was extended to cover wind generation in some reserve sharing groups. The lack of significant historical operate data was an immediate challenge, however.

Such methods have become relatively common in practice. Figure 40 shows daily windows used by various entities in the U.S. to gauge the capacity contribution of wind generation. The windows vary by time of day and season, consistent with the load characteristics in the region.

The peak period methods have some disadvantages. First, they consider only the peak hours, when there may actually be other hours in the year, say during planned maintenance outages of large baseload generation, where the system could be vulnerable. Second, they require an extensive history of production data to achieve a “convergence” in the capacity value, since significant inter-annual variations have been observed to be relatively common. . A variation of this method which considers the wind operation during the top X% of hours has similar advantages and disadvantages. Although the method is easy and straightforward it requires prior knowledge of the hourly load profile in addition to the wind profile. The appropriate percentage also seems to vary year to year from as low as 5% up to 20%. [3] In addition, it also tends to focus only the very highest load hours irrespective of system conditions.

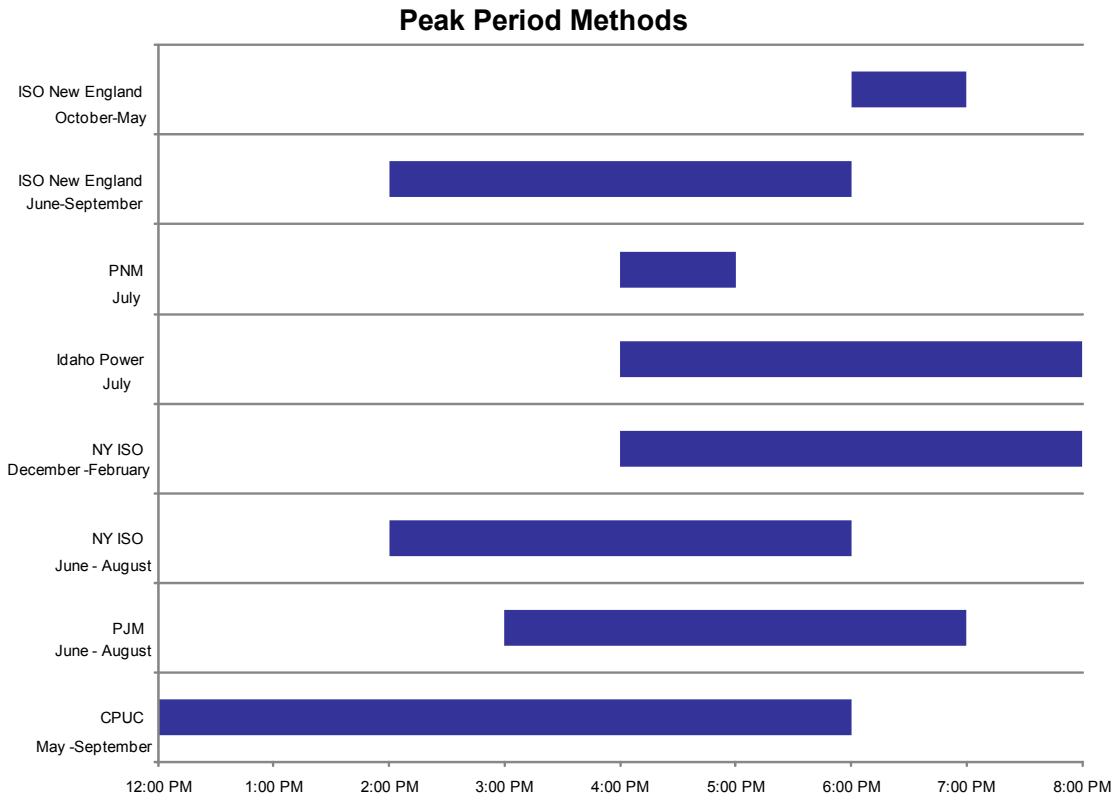

Figure 40: Summary of peak periods used in U.S. to determine wind generation capacity value. (Reference [2])

Many of the wind integration studies conducted over the past ten years have included in their scope an examination of wind generation capacity value. In these studies, the general approach has been to employ rigorous statistical techniques to calculate the change in system LOLE when wind generation is added.

Figure 41 depicts this basic method. Using chronological load profiles for a year or number of years, the LOLE is calculated without wind generation. In some cases, the amount of capacity in the study years is adjusted so that the baseline LOLE without wind generation is at the desired level, usually 1 day in 10 years. Wind is then introduced as a load modifier by simply subtracting the hourly aggregate wind generation from the corresponding load at that hour. The LOLE calculation is then re-run.

Most programs adjust the peak load around the forecast value to produce a series of LOLE results. When this is done with wind generation, a second curve is created. The Effective Load Carrying Capability (ELCC) of wind generation is defined as the incremental load serving capability at the target reliability level.

Although the computational techniques are rigorous, there are a number of shortcomings with their application to wind generation. The most significant of these is the amount and nature of chronological data required to produce a high-confidence result. Inter-annual variability will affect the ELCC calculation as well. Secondly, both wind and load have a common

meteorological driver. Therefore, the hourly profiles of load and wind generation must be drawn from the same historical year to preserve any embedded correlations due to weather. Because these calculations are almost always focused on a future year, the procedure used to scale historical hourly load profiles to reflect expected load in a future year is not a precise science. Finally, availability of adequate historical wind profile data is always an issue. Many integration studies (including the Eastern Interconnection Wind Integration and Transmission Study and the ISO-NE wind integration study begun in 2009) utilize mesoscale atmospheric simulations to re-generate data of sufficient resolution for historical years. This data has been utilized for ELCC evaluations, but in general only two or three years of data are available, which can result in widely-varying estimates of annual ELCC for wind generation.

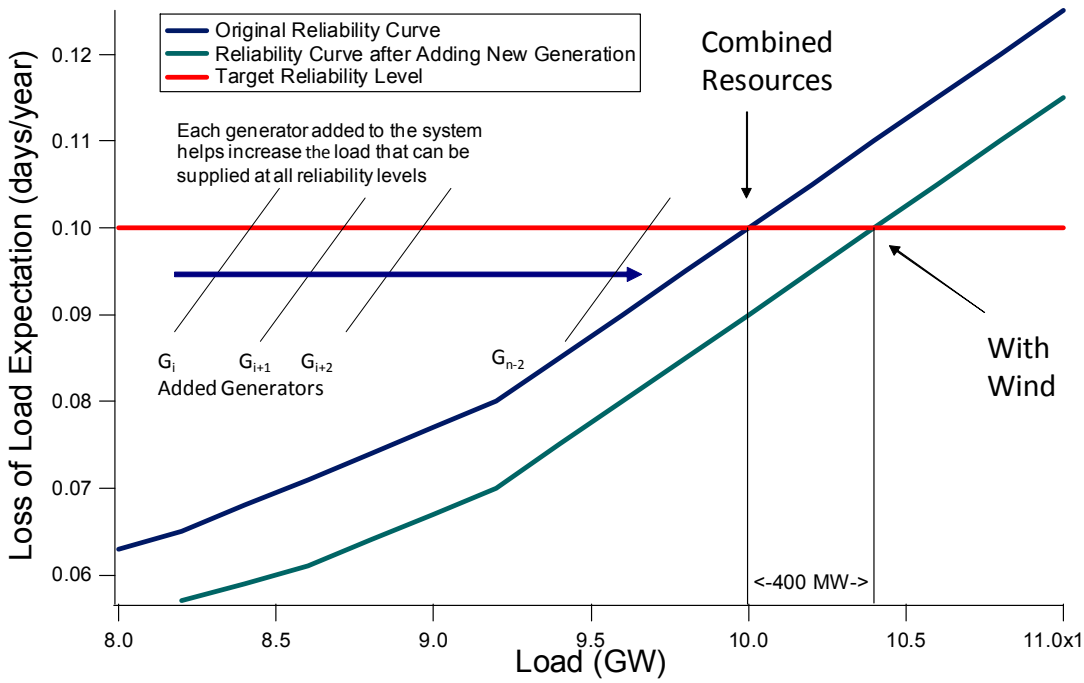

Figure 41: ELCC concept, where increase in peak load that can be served at target reliability level is assigned as the effective capacity of the resource added.

It has been suggested that at least ten years of historical data would be necessary to increase the confidence in the range of annual results. A rolling period of a decade would encompass many of the major weather drivers such as El Nino and La Nina that have recently received much greater attention. Hydro-electric utilities routinely maintain even longer data sets (e.g. 50+ years) as the basis for planning.

The recently-published report from the NERC Integrating Variable Generation Task Force weighs in on this issue. From the report:

> ***NERC Action:*** Consistent and accurate methods are needed to calculate capacity values attributable to variable generation. The NERC Planning Committee should direct the Reliability Assessment Subcommittee to collect the capacity value of variable generation based on their contribution to system capacity during high-risk hours, when performing its seasonal and long-term reliability assessments. As additional data becomes available

(i.e. involving multiple years of hourly-resolution variable generation output data from specific geographic locations and time-synchronized with system demand), NERC should consider adopting the Effective Load Carrying Capability (ELCC) approach.

5.6.3. Perspective on Methods for Determining Wind Generation Capacity Value

Assessments of wind generation capacity value have been part of the scope for many of the wind integration studies conducted over the past decade. From these studies and subsequent discussions, an informal consensus has emerged regarding the appropriateness of the various analytical methods used.

Determining wind generation ELCC from a rigorous LOLE analysis is considered to be the most accurate analytical methodology since it takes into consideration the characteristics of the remainder of the supply portfolio as well as the risk to the system during all hours of the period studied, not just the peak hours. In practical applications, the limited data sets available are recognized as a significant shortcoming. There are ways, however to extend the data set, and it is possible that NREL will be doing just that with the meso-scale data set that underlies the ISO-NE 2009 Wind Integration Study.

Historical performance is seemingly the "gold standard" with respect to characterizing the capacity value of wind generation. The obvious challenge at the present is that this history is quite sparse. So, while more rigorous methods such as LOLE do provide a more comprehensive view of reliability attributes of a given system, the results are only as good as the input data. In the case of hourly wind production data, the input data is insufficient at the moment for production high-confidence results. Going forward the project team believes that a mixture of rigorous calculation and extensive historical data production data will be the pillars upon which the methodologies of the future will rest.

5.7. REFERENCES

[1] IEA Annex 25: "Design and Operation of Power Systems with Large Amounts of Wind Power - State-of-the-Art Report" BTT Working Papers 82, October 2007

[2] Milligan, M., and Porter, K.: "Determining the Capacity Value of Wind: An Updated Survey of Methods and Implementation" Conference Paper NREL/CP-500-43433, June, 2008.

[3] Kueck, John, and Kirby, Brendan: "Measurement Practices for Reliability and Power Quality" ORNL/TM-2004/91, prepared for the U.S. Department of Energy, June, 2004

[4] Kara Clark, Gary A. Jordan, Nicholas W. Miller, Richard J. Piwko "The Effects of Integrating Wind Power on Transmission System Planning, Reliability and Operations" (2005, March.). Available: http://www.nyserda.org/publications/wind_integration_report.pdf