GEOS 24705 / ENST 24705 / ENSC 21100

Lecture 17

Transportation & engines

Cars: explosion of development after 1885 proof of concept

1891: Benz forms Benz & Cie co.

1899: 430 workers, 572 cars sold world's largest auto company, but production is not fast

Benz & Cie Vikoria automobile, 1894
(Karl and Bertha onboard, image: Wikipedia)

1885: Daimler & Maybach develop advanced 4-stroke engine, attach it to motorcycle

1886-1889: Daimler & Maybach makes 4-wheeled automobile

4-cylinder engine, 10 mph top spd, first sale in 1892

Daimler-Maybach automobile, 1886 (VintageWeb)

Merger to Daimler-Benz 1926

10 years later: demonstrations in the U.S.

1893: First auto manufacturing in U.S. (Duryea Wagon Motor Co., MA), flowering of many small companies

1895: Chicago Times-Herald sponsors first automobile race, Hyde Park to Evanston and back: *60+ entrants, 11 start (6 at start line), 2 finishers*

"A Prize for Motors," with a $5,000 purse for "inventors who can construct practicable, self propelling road carriages."

Duryea car beats imported Benz

10:23 to finish (5 mph)

2 electric cars did not finish

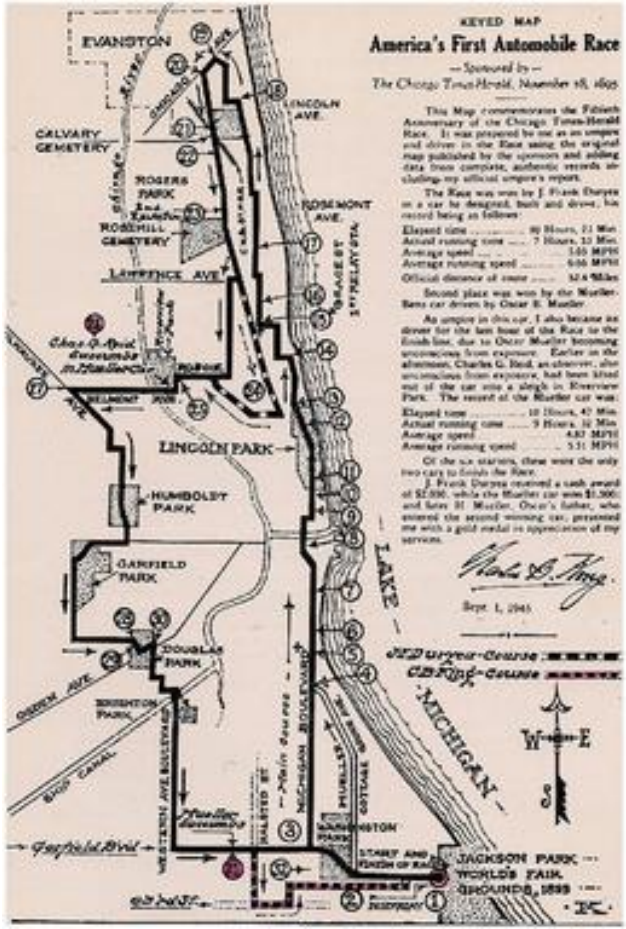

20 years later: Production improvements in U.S.

1896: Henry Ford starts company, Detroit

1908: Mass production of Ford Model Ts

first affordable automobile for the middle class

15,000 orders placed within days, > 15 M total sold

Ford Model T assembly line, 1924.

Ford Model T, 1908. *(repainted, howstuffworks.com)*

Two-stroke engine

Simple, cheap

First stroke:

Piston rises, compresses fuel/air mix

Meanwhile, unburnt fuel is drawn into crankcase

Second stroke:

Fuel/air is ignited

Piston driven down

Exhaust gas leaves cylinder

Fuel/air mixture enters cylinder

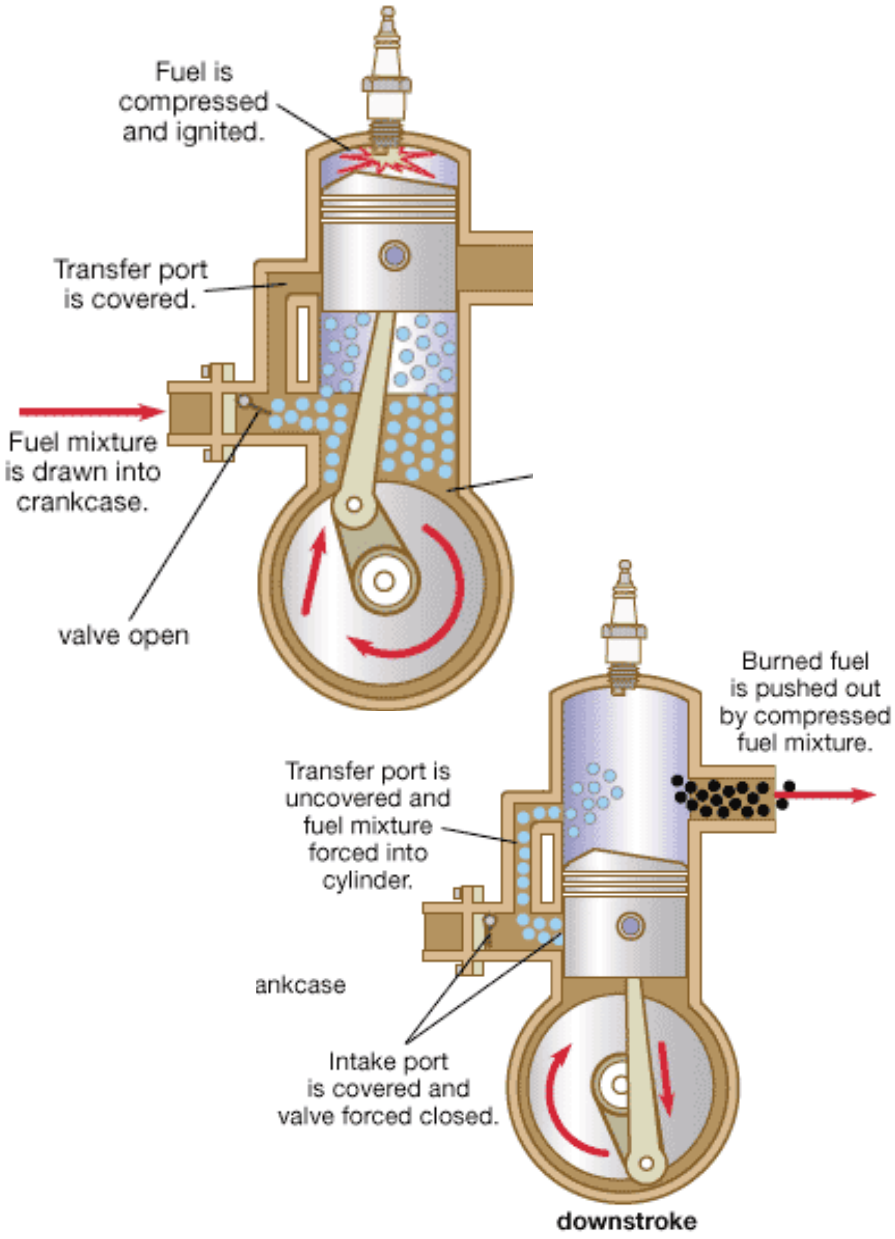

Two-stroke engine

Simple, cheap

Advantages:

Disadvantages:

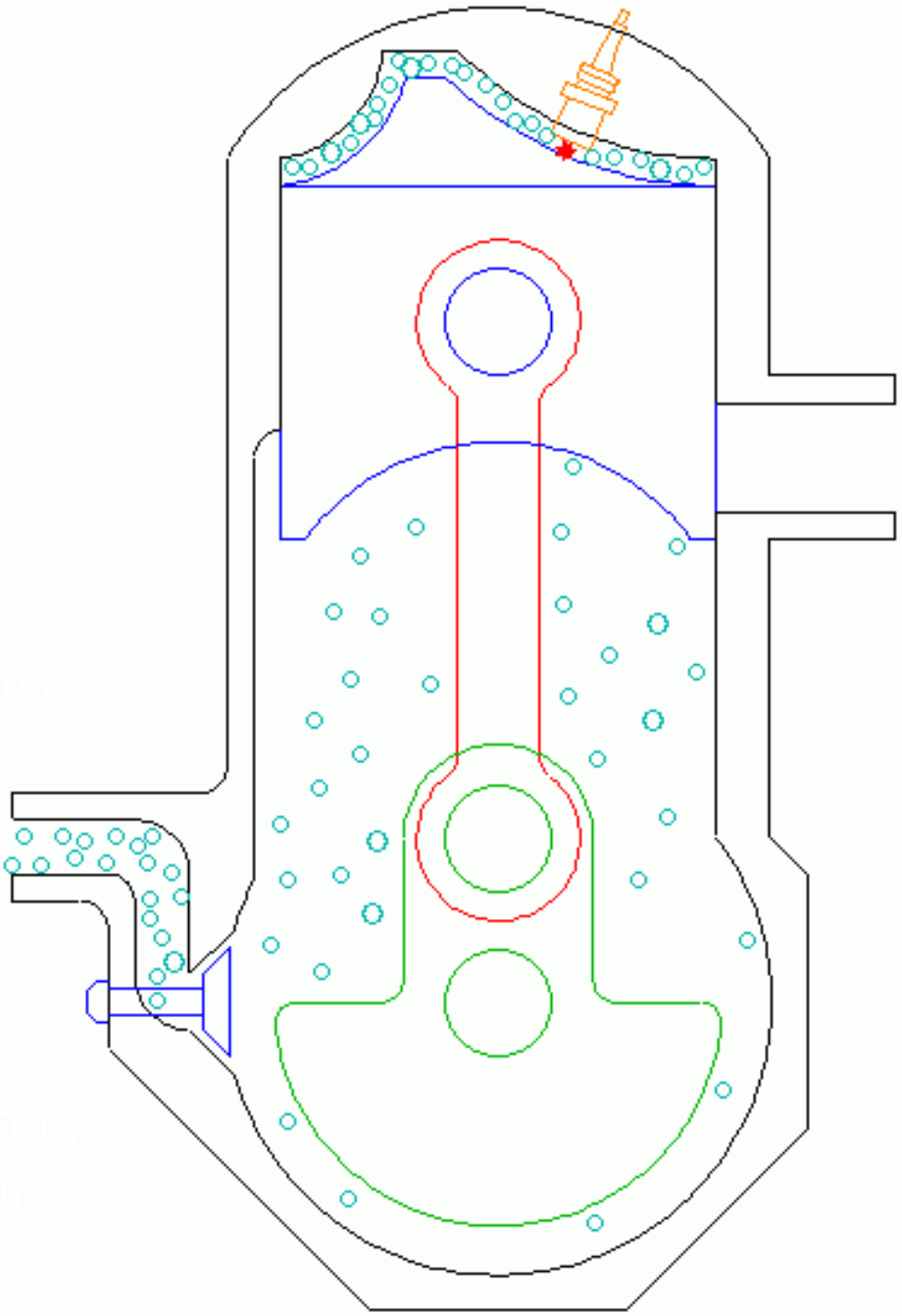

Two-stroke engine

Simple, cheap

Advantages:

Higher power-to-mass since is never "off" – each stroke is power stroke. Smoother power in one-cylinder engine

Therefore: engine of choice for cheap or hand-carried applications

Disadvantages:

Some unburned fuel escapes – very polluting

Since fuel fills crankcase, lubricating oil must be mixed into fuel mixture – *even more polluting*

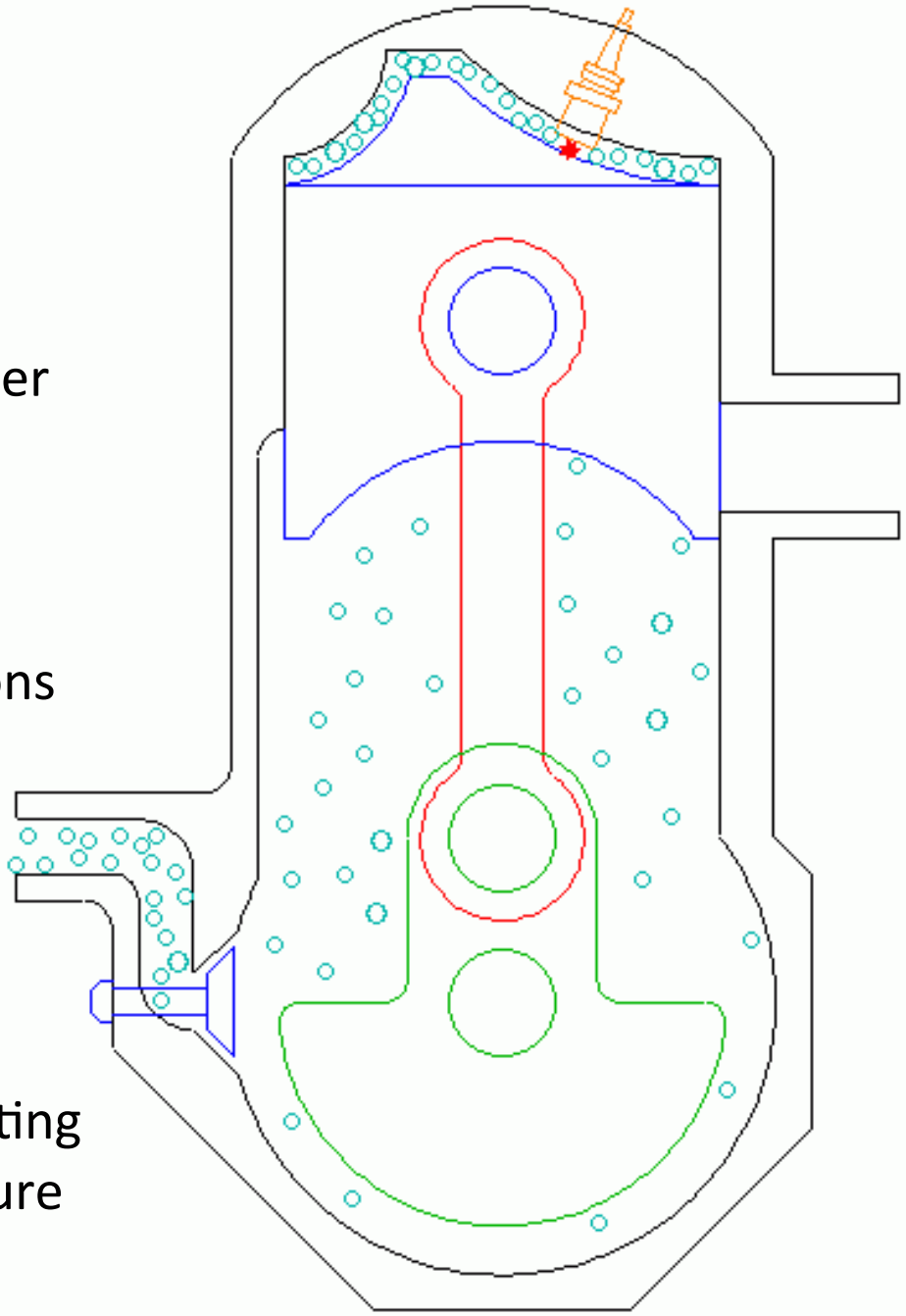

Copyright 2000, Kaveney.com

Four-stroke engine: Otto cycle

driver of most transportation

One preparation cycle and one power cycle *(down/up/down/up)*

1. Intake
2. Compression
3. Combustion
4. Expansion *(Exhaust)*

Note use of spark plug to set off combustion (same for 2-stroke)

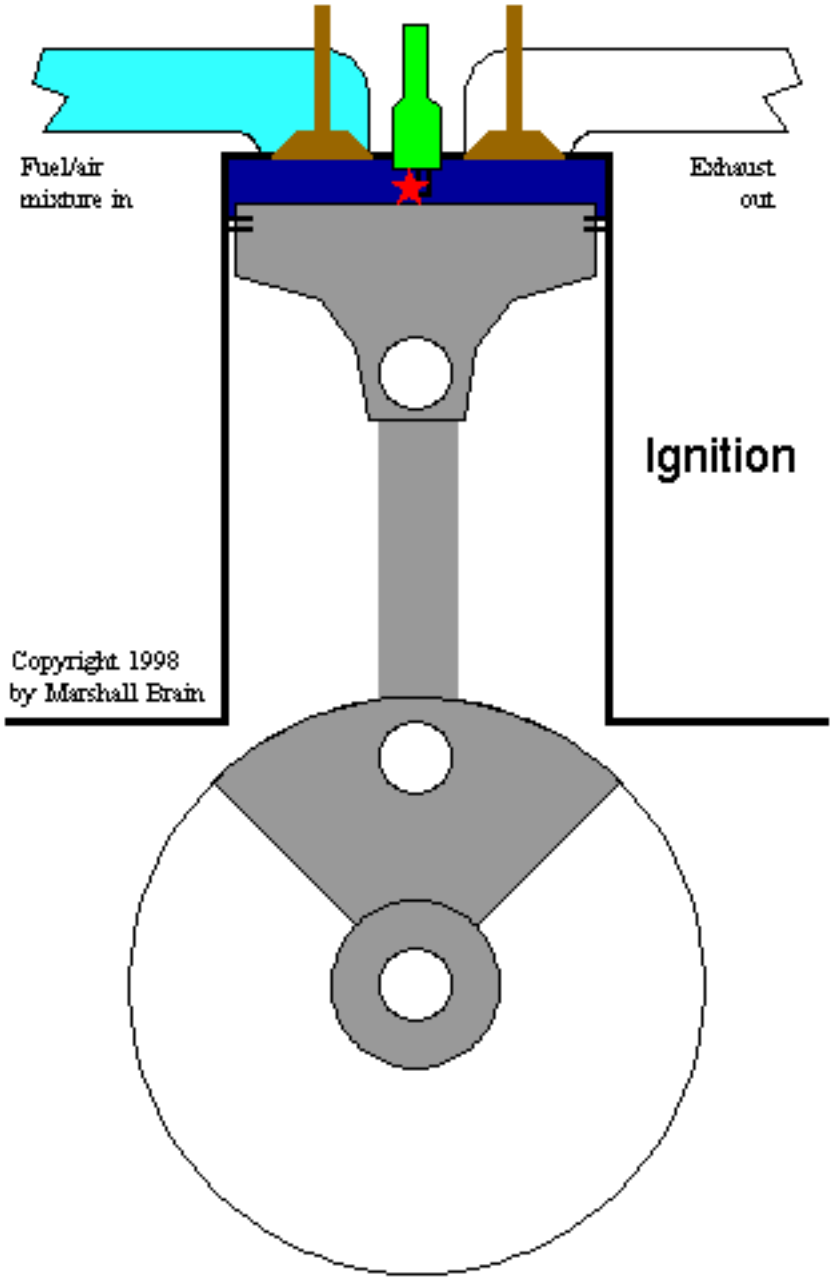

Thermodynamic cycles: Otto cycle *(Rochas 1862, Otto 1876)*

Fast combustion at constant volume. Sparkplug to ignite quickly and completely.

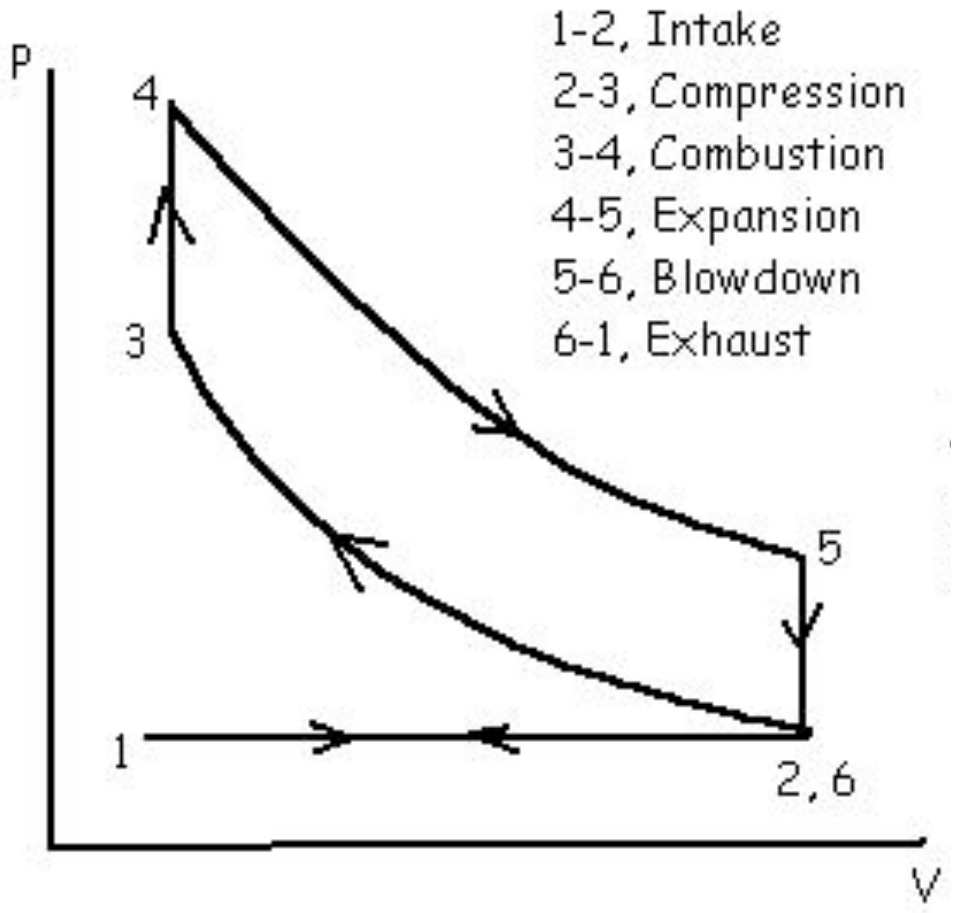

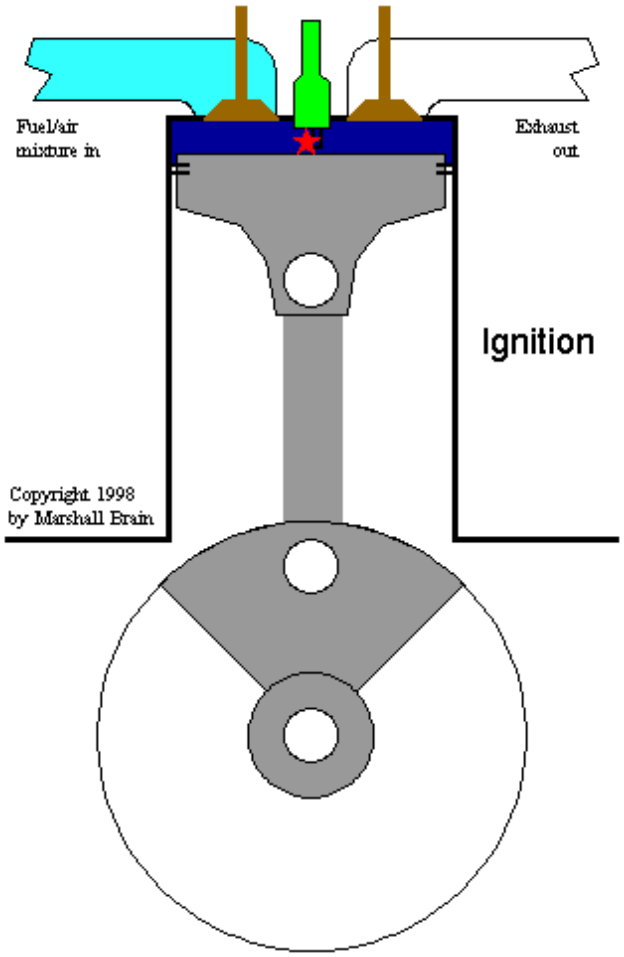

ideal Otto efficiency = $1 - (1/r)^{\gamma-1}$ where r = compression ratio V_1/V_2

(γ = specific heat ratio, property of the gas, ~ 1.4 for air)

Thermodynamic cycles: Otto cycle *(Rochas 1862, Otto 1876)*

Fast combustion at constant volume. Sparkplug to ignite quickly and completely.

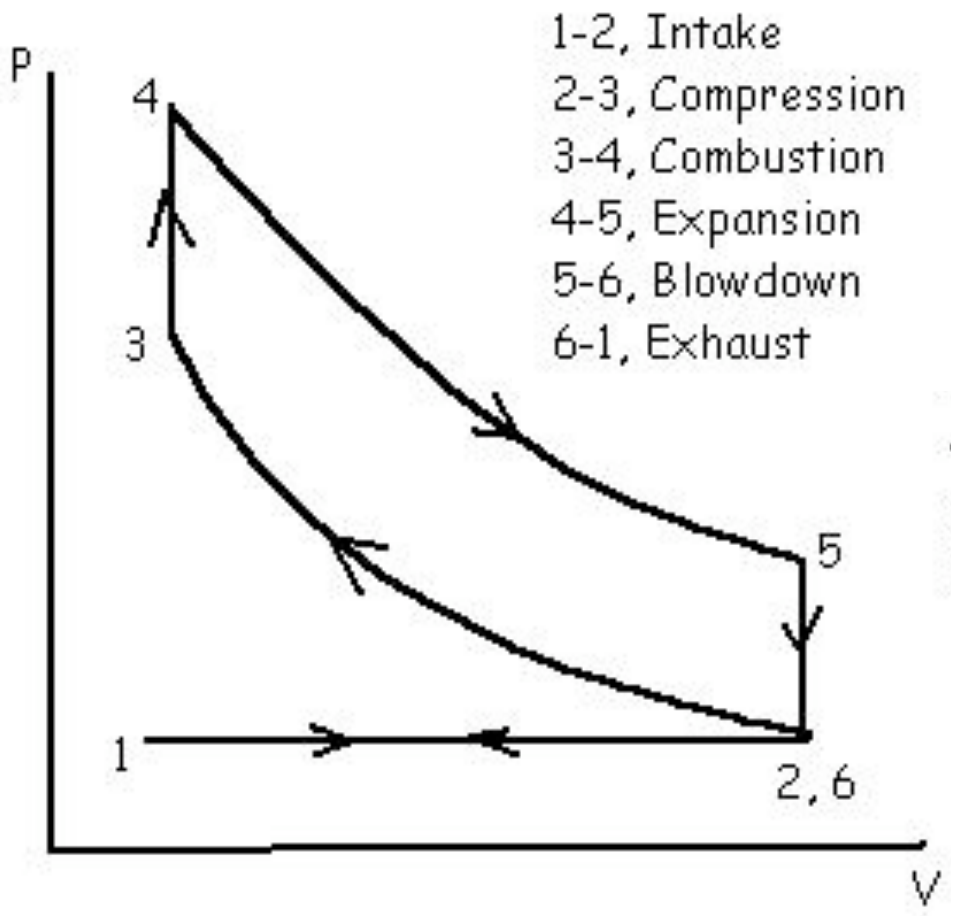

Efficiency is a function of compression ratio, so design for high ratios: r ~ 7-10 in cars

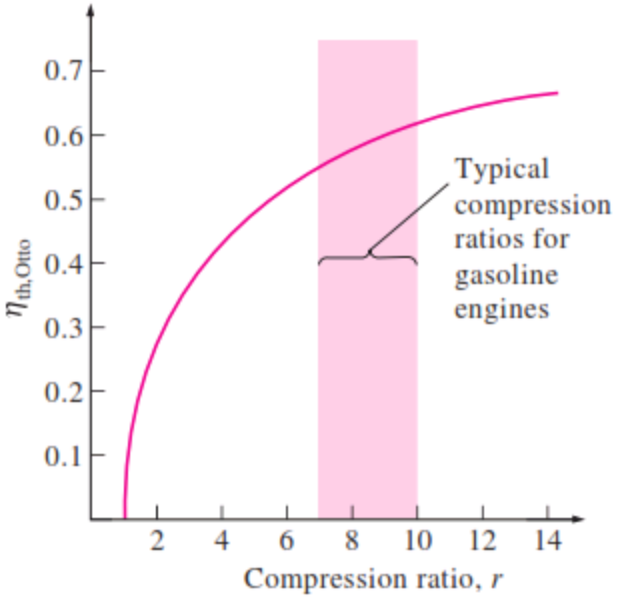

Ideal Otto efficiency (actual is ~ ½ as large)

ideal Otto efficiency = $1 - (1/r)^{\gamma-1}$ where r = compression ratio V_1/V_2

(γ = specific heat ratio, property of the gas, ~ 1.4 for air)

Four-stroke engine: Otto cycle

driver of most transportation

Advantages:

Produces heated, compressed, very dense fuel/air mixture

Separation of unburnt fuel/air from combustion cycle

Disadvantages:

"off" half the time – half the power-to-mass ratio that it might have

Generally have at least two cylinders, so that when one is "off" the other can provide the push to keep rotating the shaft

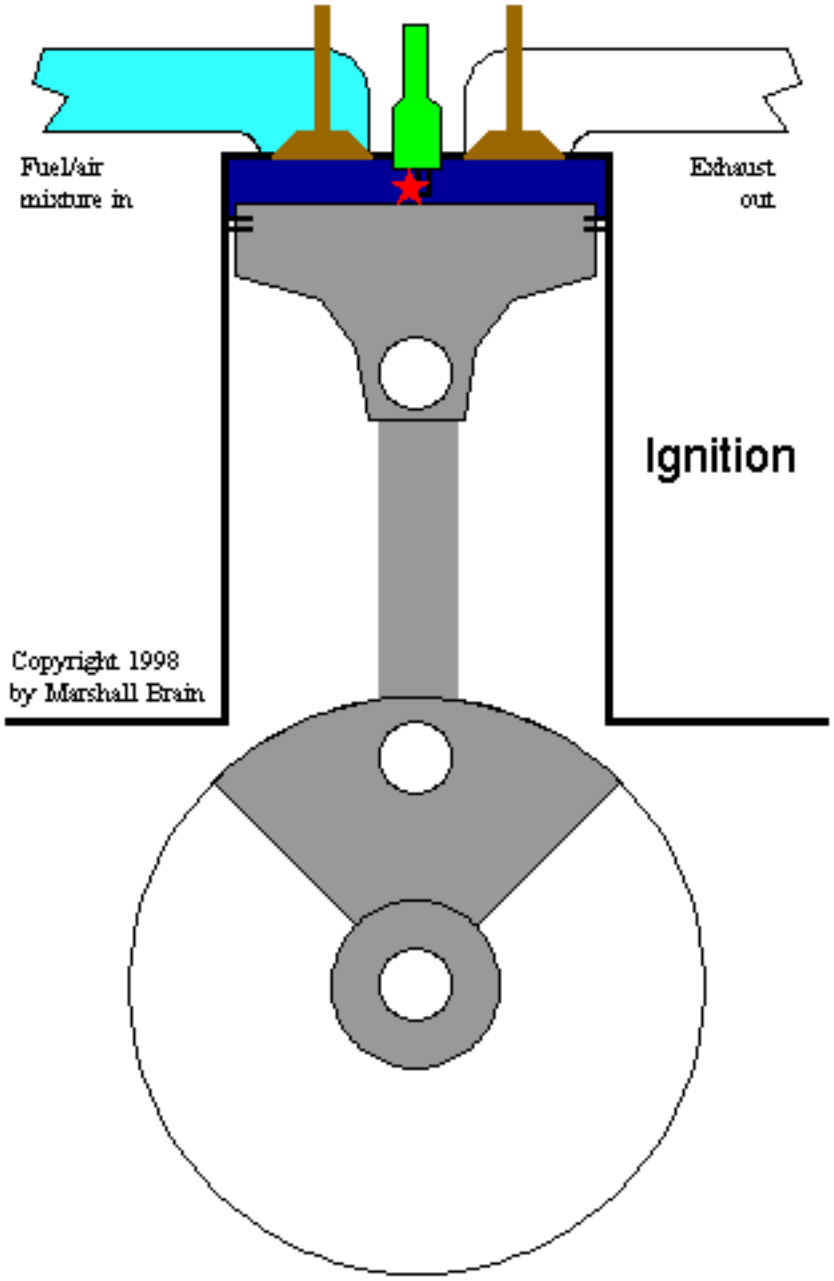

Four-stroke engines: generally have pairs of cylinders

Gasoline engines for automobiles typically have 4-8 cylinders
Out-of-phase cylinders provide force to drive pistons through compression phase and yield balanced power

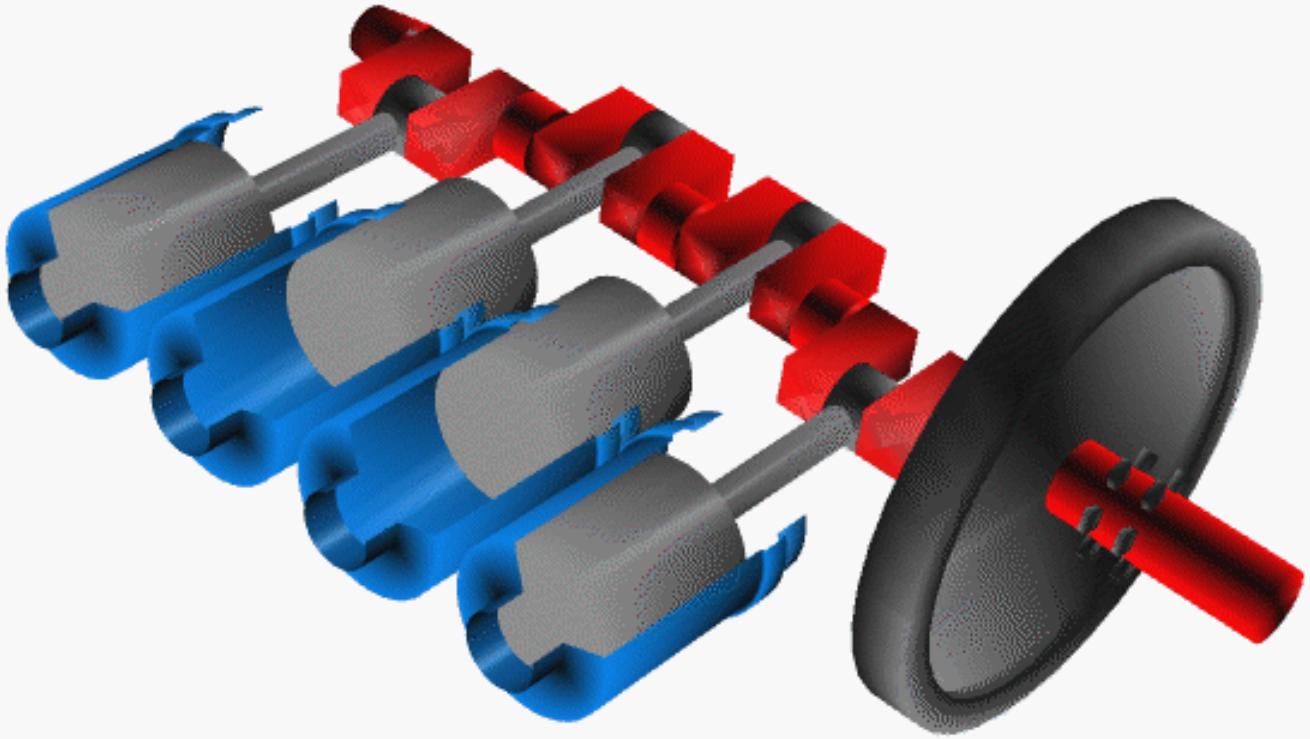

Note central crankshaft turns linear piston motion into rotational motion and puts work into the same shaft

More power = more cylinder volume

get more volume from bigger cylinders, or more cylinders

Some high-power automobile engines have 8 cylinders, hence “V8”

BMW M3 V8 Engine: 4.0-litres total, i.e. 4000 cc in 8 cylinders
(lab lawnmower engine ~ 100 cc (1 cylinder)

Engine history: *non-Otto-cycle engines*

2 other famous German-speaking auto inventors: who were they?

Both exhibited at the 1900 Paris Exposition

One *(former electric shop worker)* won the speed competition with an **all-electric car** carrying a 900-pound battery with a 38 mile range & top speed of 36 mph.

The other *(former steam engine designer)* won the Grand Prix of the whole Exposition for a new **bio-fueled engine** running on peanut oil, operating on a new thermodynamic cycle he'd invented from 1st principles

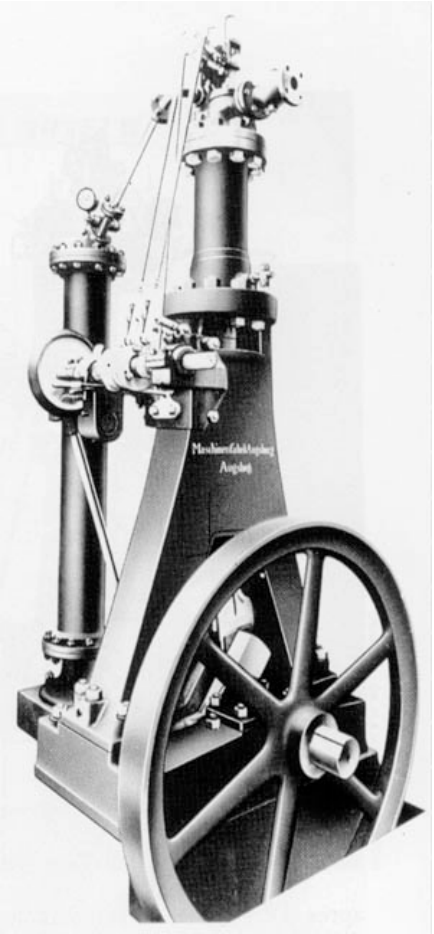

Diesel engine, invented 1893, 17% efficient. Designer: Rudolf Diesel, German-trained

Lohner-Porsche Elektromobil, designer: Ferdinand Porsche, Austrian, age 24. Note electric motors in front wheels.

Thermodynamic cycles: Otto cycle *(Rochas 1862, Otto 1876)*

Do you need to combust at constant volume? Wastes power (area on graph)

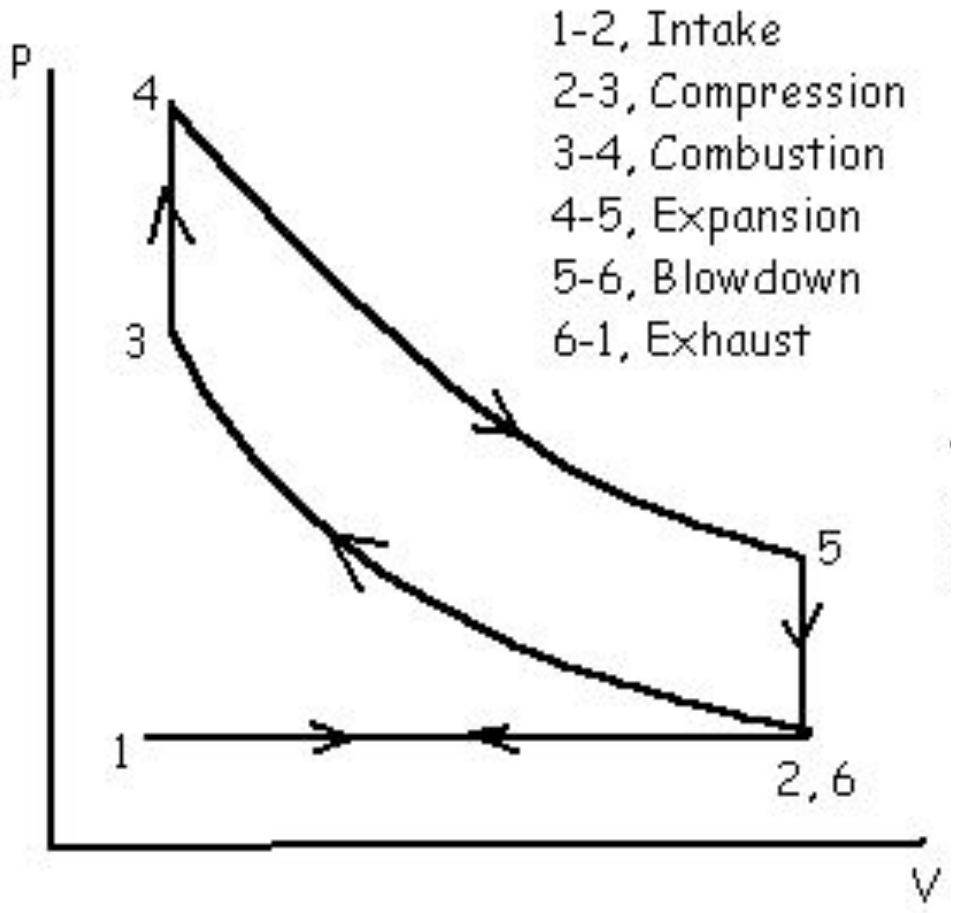

Thermodynamic cycles: Diesel cycle *(Diesel 1893)*

Do you need to combust at constant volume? Wastes power (area on graph)
You would get more power if you continued compressing gas before igniting...

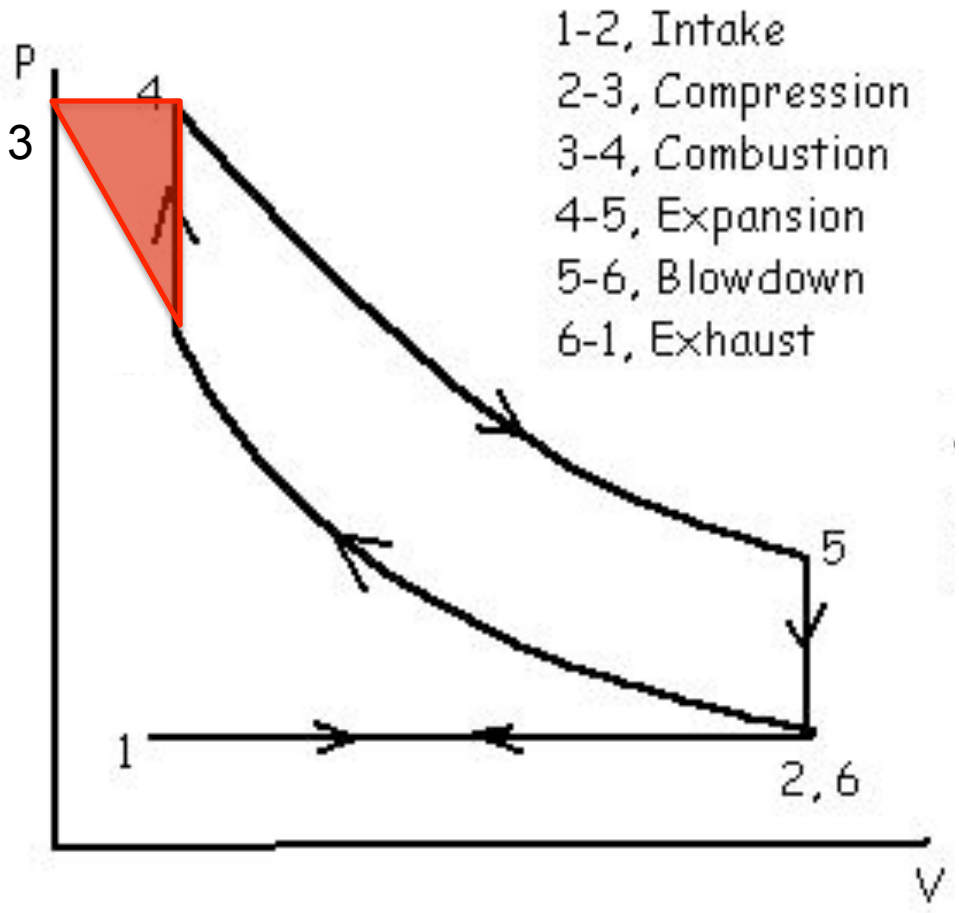

Diesel cycle involves

- higher pressure
- lower final volume

→ higher compression ratio
r ~ 14 – 22 or more

ideal Diesel efficiency = $1 - [(1/r)^{\gamma-} * (\alpha^{\gamma} - 1)/(\gamma(\alpha - 1))]$

where α is the "cutoff ratio" V_4/V_3. Lower than Otto for a given r, but r is bigger for Diesel.

Thermodynamic cycles: Diesel cycle

Cycle designed for higher efficiencies.

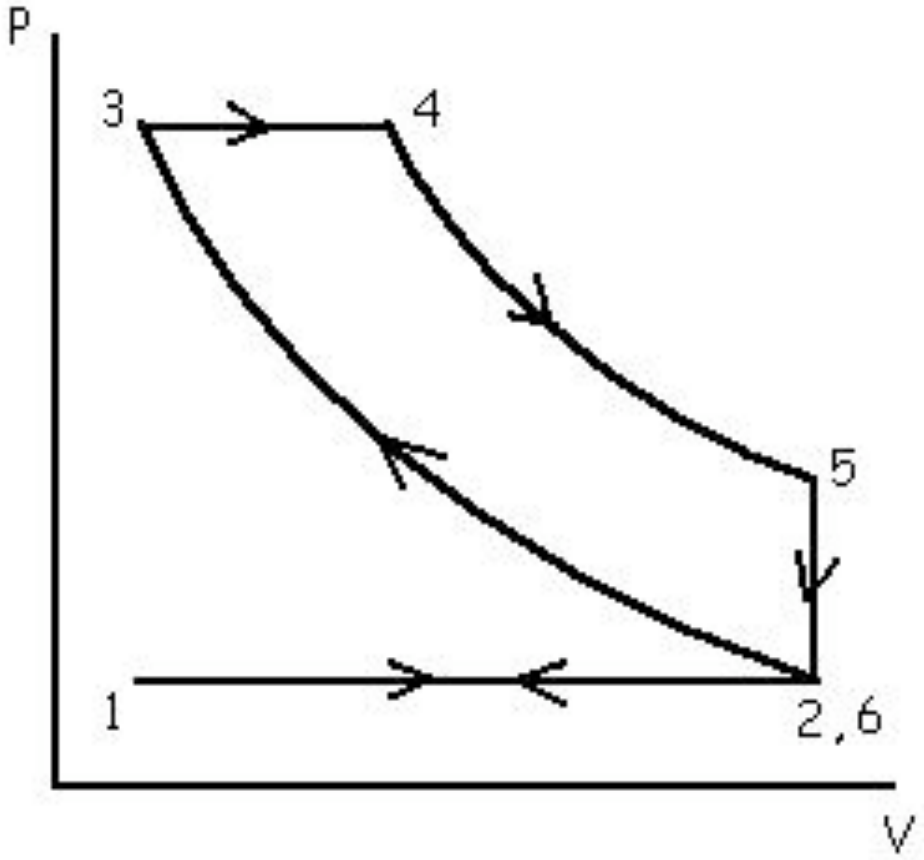

Diesel cycle achievable ***only*** if system can withstand higher pressures before igniting.

1) First compress air, THEN spray fuel in to control ignition.

2) Use specially designed "Diesel fuel" that can reach higher pressures before ignition (originally used peanut oil)

Diesel fuel is less volatile than gasoline, ignites on compression... but only at very high P

ideal Diesel efficiency = $1 - [(1/r)^{\gamma-} * (\alpha^{\gamma} - 1)/(\gamma(\alpha - 1))]$

where α is the "cutoff ratio" V_4/V_3. Lower than Otto for a given r, but r is bigger for Diesel.

Torque = “turning force”

Your ability to turn something depends not just on the force you apply but on the lever arm you have

Torque = force x distance units of energy

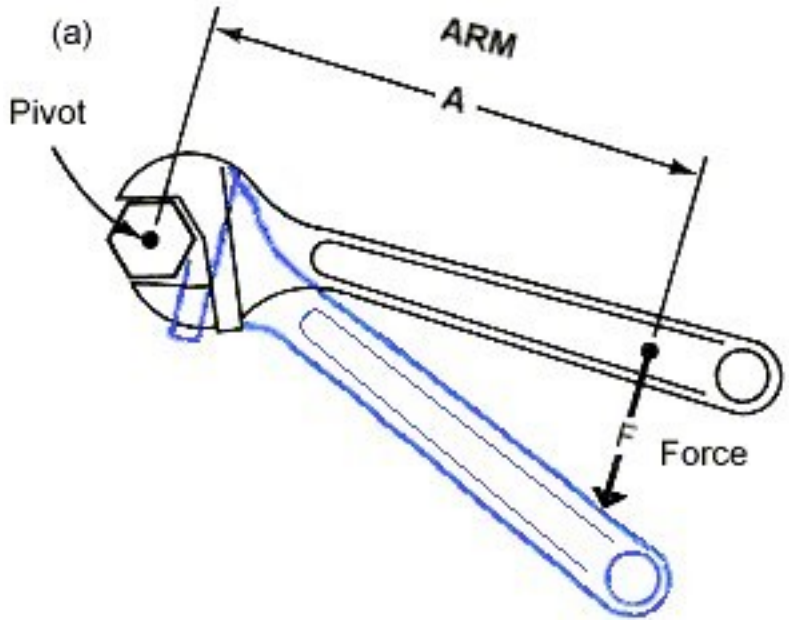

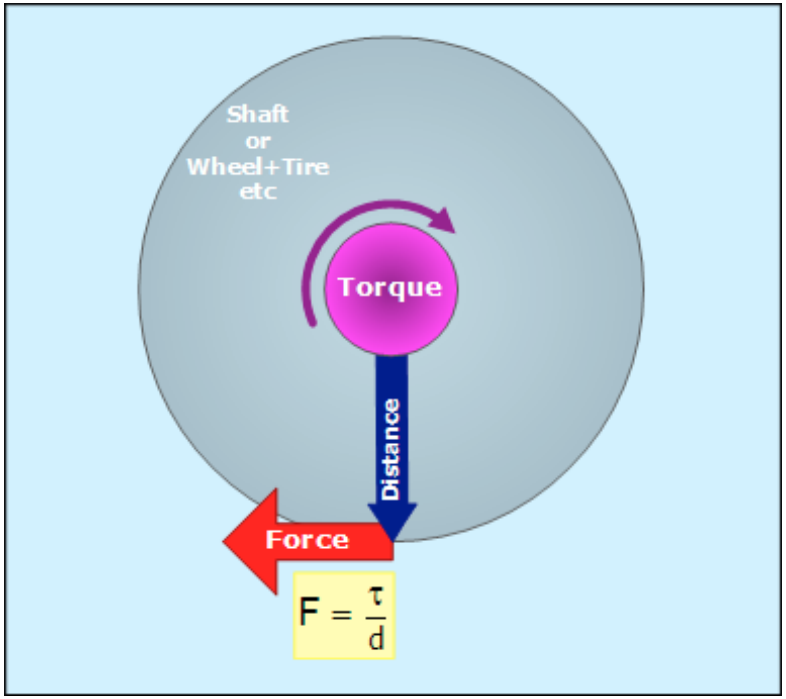

Power = energy/time

= torque x rotation rate (P = τ x ω)

NO internal combustion engines runs well at slow speeds

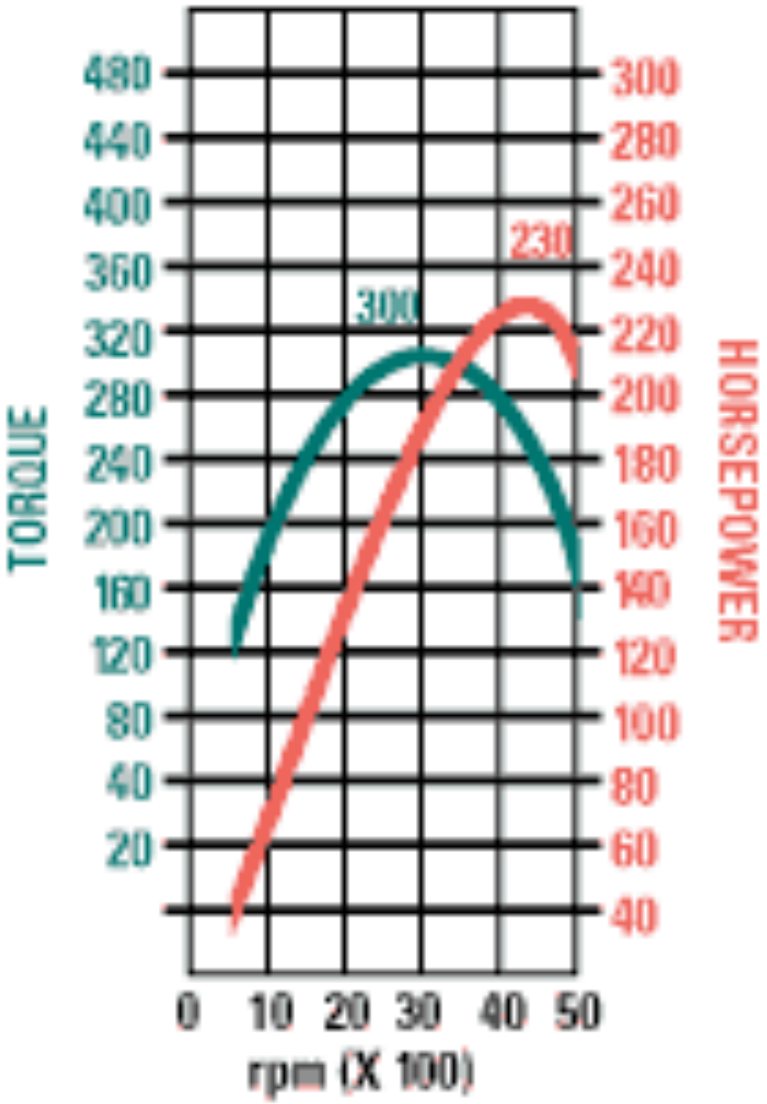

Otto engine, Dodge Ram pickup V8 5.9 L engine, 2004

Fundamental problem with ICEs:

Low torque at low rpm. How do you start the car from a standstill? How do you accelerate?

Note that ICEs do **nothing well at low speed**: not torque, not power, not efficiency (not shown here)

but, Diesel engine has more torque at low speed than Otto

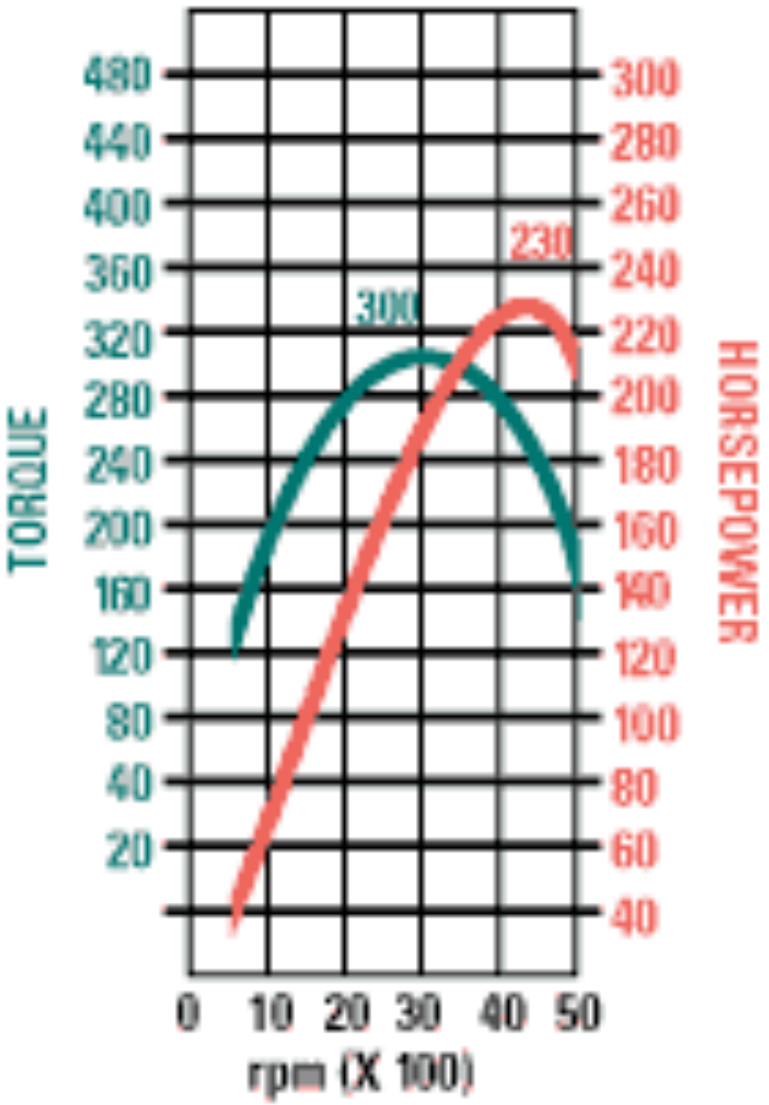

Otto engine, Dodge Ram pickup V8 5.9 L engine, 2004
peak torque at 3000 rpm

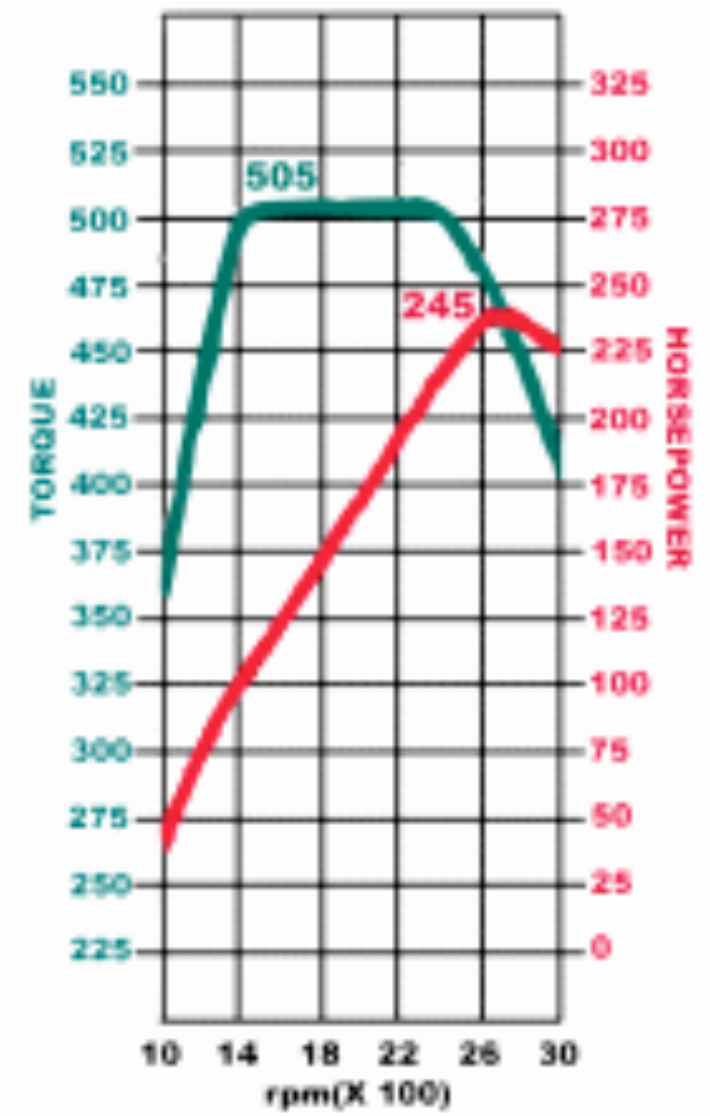

Diesel engine, Dodge Ram pickup 5.9 L, standard output, 2004
peak torque at 1400-2400 rpm

ICEs must run at high speed, else can't make enough torque

Fundamental mismatch between engine and wheel speed

Kludge = **transmission** – a gearing system to allow an ICE to operate at high speed even while vehicle moves slowly

P = τ * ω. If want power P, and τ is constrained, must have high ω

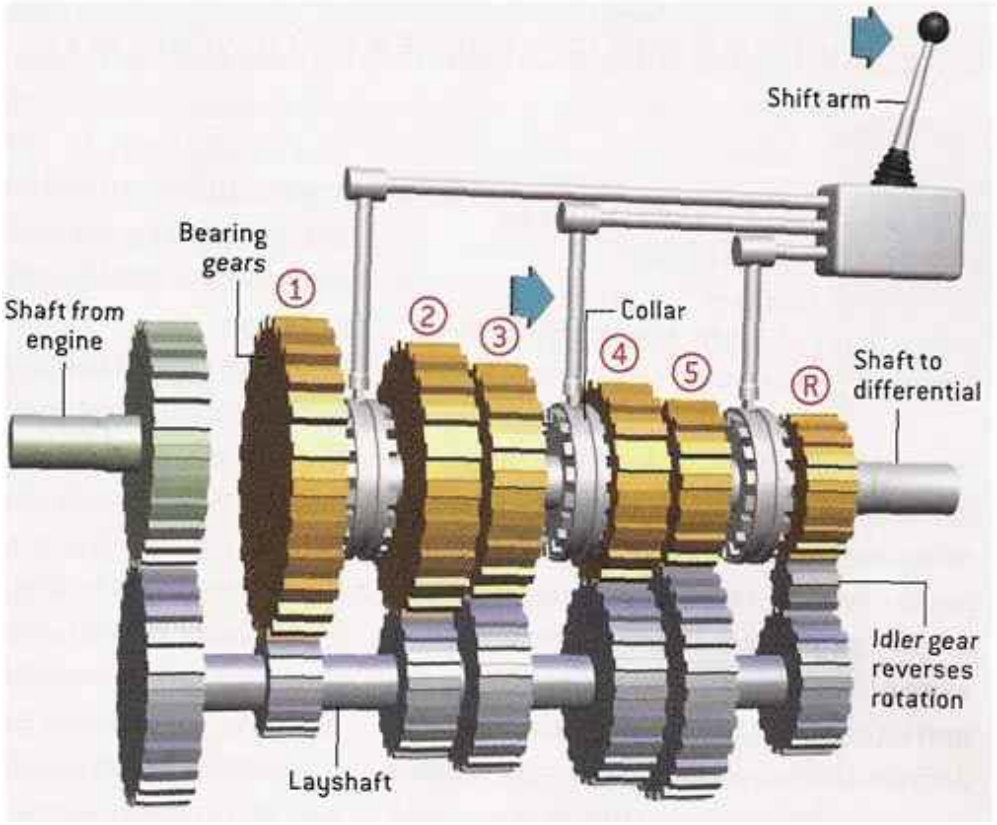

Manual transmission schematic, hyperlogos.org

ICEs must run at high speed, else can't make enough torque

Fundamental mismatch between engine and wheel speed

Kludge = **transmission** – a gearing system to allow an ICE to operate at high speed even while vehicle moves slowly

P = $\tau * \omega$. If want power P, and τ is constrained, must have high ω

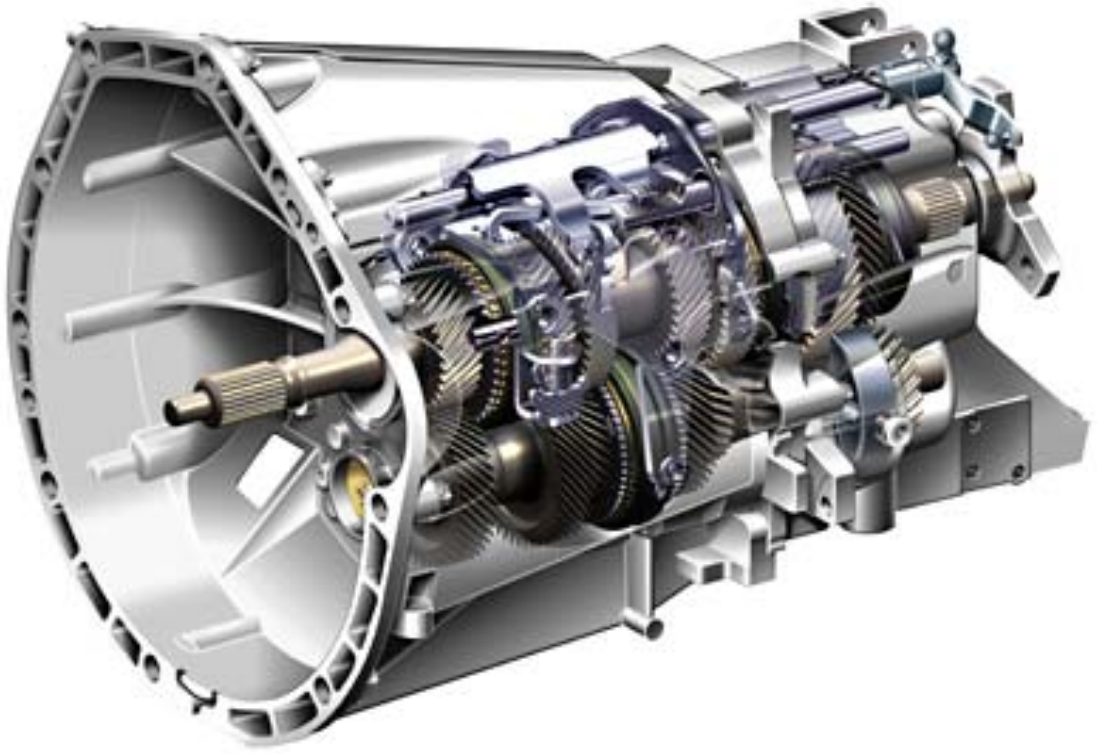

Mercedes-Benz C-class coupe 6-speed manual transmission

Diesel: advantages

1. **Higher compression ratios = higher temperatures = higher efficiency** (in practice 40%, up to 55% in some demonstrated engines)

   → *Fuel efficiency greater than with gasoline hybrids*

2. **Reliability:** no sparkplugs – ignition occurs from compressional heating alone

3. **More torque at low speeds** - very useful for pushing big loads at slow speed.

4. **Lubrication:** fuel is better lubricant than gasoline, so piston rings and cylinder bores last longer

Diesel: disadvantages

1. **Weight –** heavier engine construction to deal with higher pressures

2. **Poor torque at high speeds** – bad acceleration when at cruising speed

3. **Inherently polluting -** incomplete combustion gives sooty particulates
   Why? Fuel not pre-mixed outside cylinder but injected just before combustion, after compression.

Overall: drawbacks of the ICE

- Engine speed mismatched to wheel speed

  → *requires transmission*

- Single power system

  → *requires drivetrain*

- Single power system but wheels must rotate at different rates (when going around curves)

  → *requires 'differential'*

Which engine to choose?

(besides side-effects of pollution, noise, etc, as well as cost/durability/reliability)

1. **Power/mass:** heavier engines harder to move or carry.

2. **Efficiency:** how much mechanical work you get out of a given amount of energy.

3. **Torque:** “turning force”. Affects how fast you can accelerate, or how big a load you can get moving.

What is each engine type best for?

Gasoline: poor torque at low speed, good torque (acceleration) when at cruising spd., light weight

Diesel: higher torque at low speed, less torque at cruise, heavy weight but high power

Electric: max torque at low speed, very little torque once at cruise, heaviest choice: requires generator (or heavy battery)

All diesel-electric trains are series hybrids

Hybrid technology: engine (2-stroke diesel for maximum power) drives generator; electricity carried to each wheel to drive separate electric motors. *No need for battery in between.*

Right: EMD 12-710G3B engine, 3200 hp (2.5 MW)

12 cylinders, each with 11.6 liter displacement, twice that of the biggest gasoline engines. 16:1 compression ratio.

The generator is 6 feet in diameter, weighs ~18,000 pounds, turns at 900 rpm (very slowly).

Figure: Wikipedia

Locomotives: all diesel-electric trains are series hybrids

Individual motors weigh 6000 pounds and draw over 1000 amps.

Electric motors providing braking (avoid friction brakes). Electric motors act as generators and torque slows train.

Electrical energy from braking not necessarily recovered – often dissipated in resistors on top of train.

Batteries to store electrical energy are expensive and trains don't brake often.

Electric motors driving wheels have single fixed gear

Figure: howstuffworks.com

Early automotive history: non-Otto cycle engines

Hybrid gasoline-electric vehicles are not new

First hybrid 1901: to extend range, gasoline engine added to charge battery

Lohner-Porsche, hybrid “Mixte”, top speed 35 mph. In-wheel motors on all four wheels – first four-wheel drive vehicle. 83% efficient at conversion of electrical-mechanical energy.

Figure: jalopnik.com

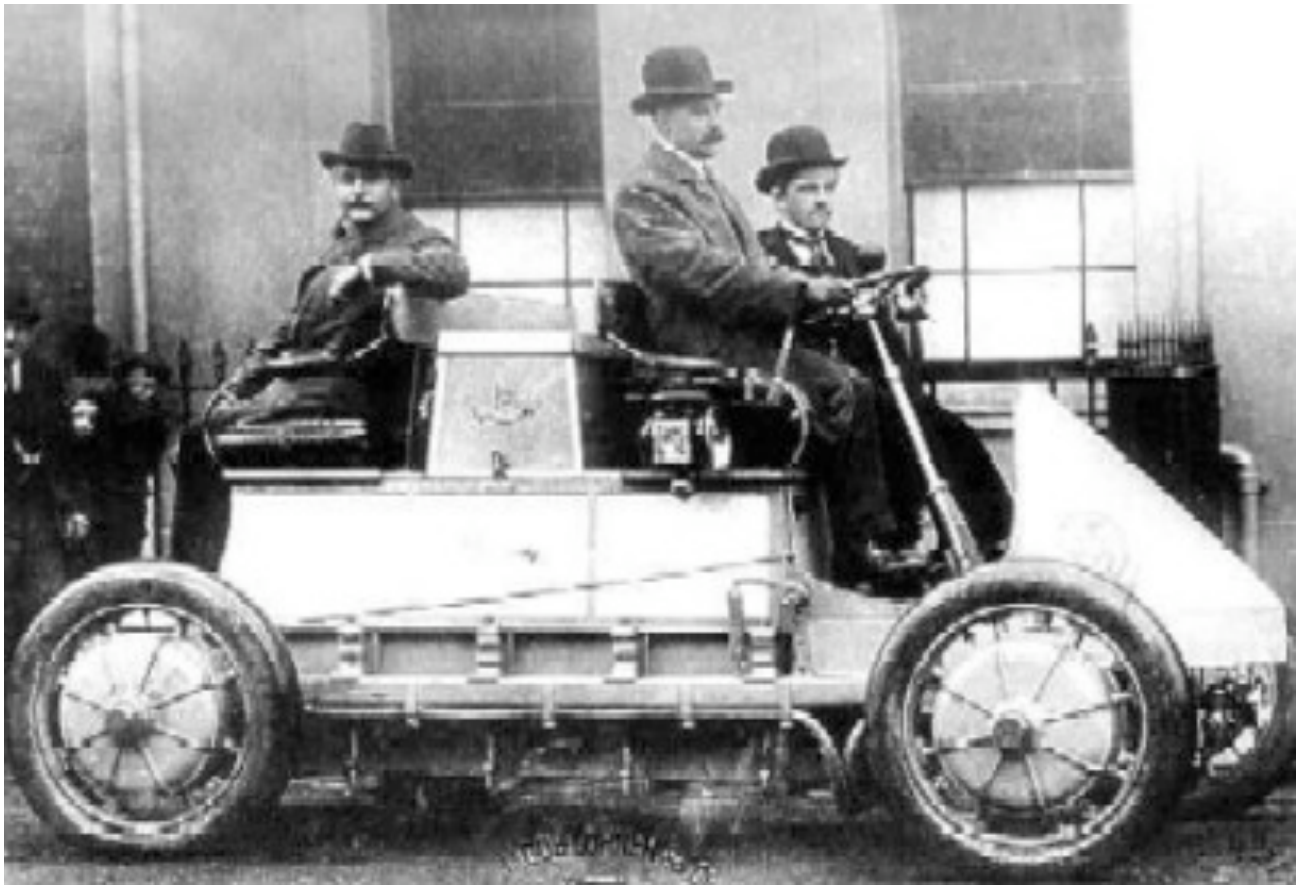

Also not new: linking together single engine, multiple motors

Hybrid technology in "land trains": gasoline engine in lead car drives generator; electricity carried to each car to drive separate electric motors

Porsche "Landwehr", post-1905 (while Porsche employed by Daimler), used by Emperor Joseph's military to bring supplies to troops..

Figure: hybrid-vehicle.org

Transportation: steam also viable in personal vehicles

Design: Double-acting but closed system – water is condensed and re-used.

Advantages:

- Max torque at zero speed = no need for transmission
- Also no need to idle
- And lower speed engine –
- = less wear and tear
- Fewer moving parts
- Fuel supply often flexible.

Disadvantages:

- Heavier
- Slow to start

Figure: **1901** Kidder Steam Wagon. Kidder Motor Vehicle Co., CT (1900-1)

Transportation: steam cars persisted for ~30 years

Stanley Steamer: biggest selling U.S. car by 1899 (200 sold).

Burned gasoline or kerosene externally & made steam in vertical-tube boiler

Set world speed record in 1906 (128 mph). Production til 1927.

1911 Stanley Corp. Model 72 20 hp Roadster

(Photo: Ken Hand)

History of autos summary: we've seen it all before….

- Innovation in engine fundamentals
- Multiple competing technologies:
  electric, gasoline, steam
- Hybrid gasoline-electric vehicles
- Multiple small car manufacturers with small production volumes
- Innovation as response to fuel prices or standards

Why did the internal combustion engine win out?

In part, because fuel became cheap…

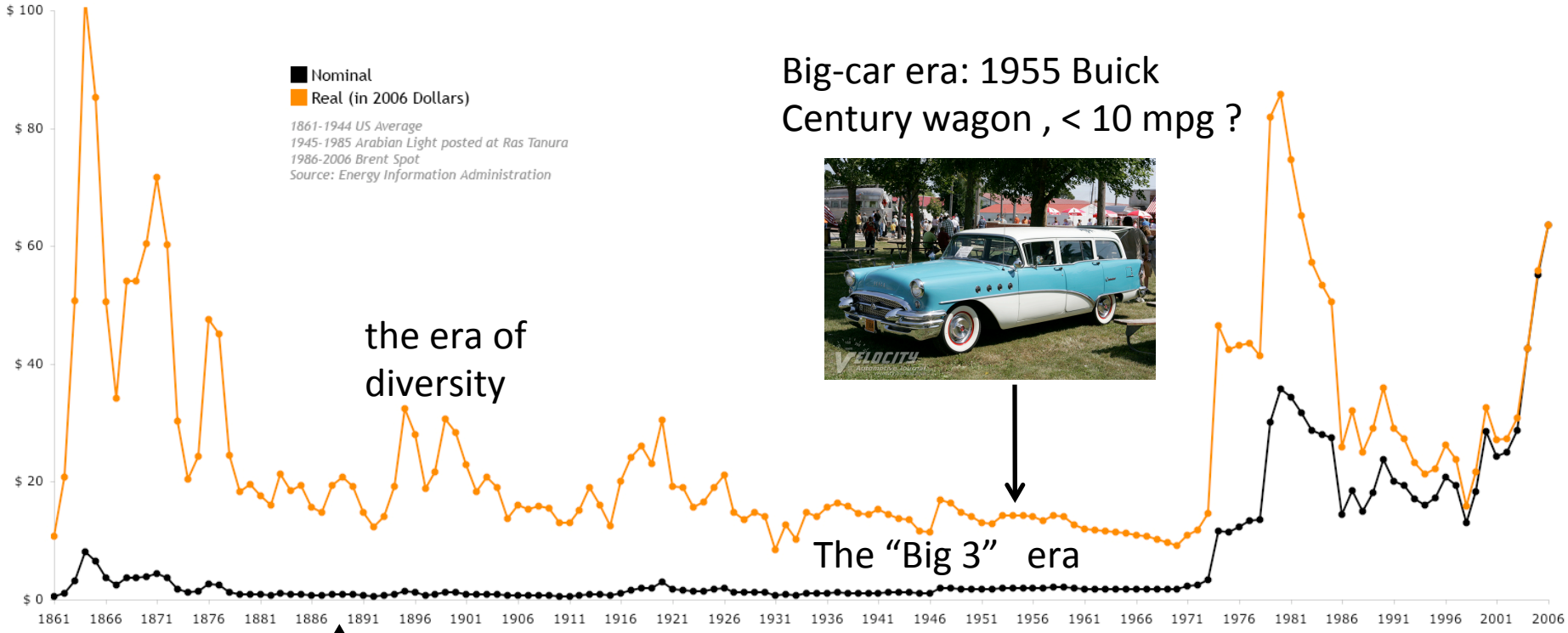

Big-car era: 1955 Buick Century wagon , < 10 mpg ?

the era of diversity

The "Big 3" era

1888: Bertha Benz' drive

1908: Production of Model T Fords begins in Detroit

1973 oil shock

1973 Datsun 510

OPEC crisis drove interest in fuel economy

Pitching small cars to the American people

required new approaches….

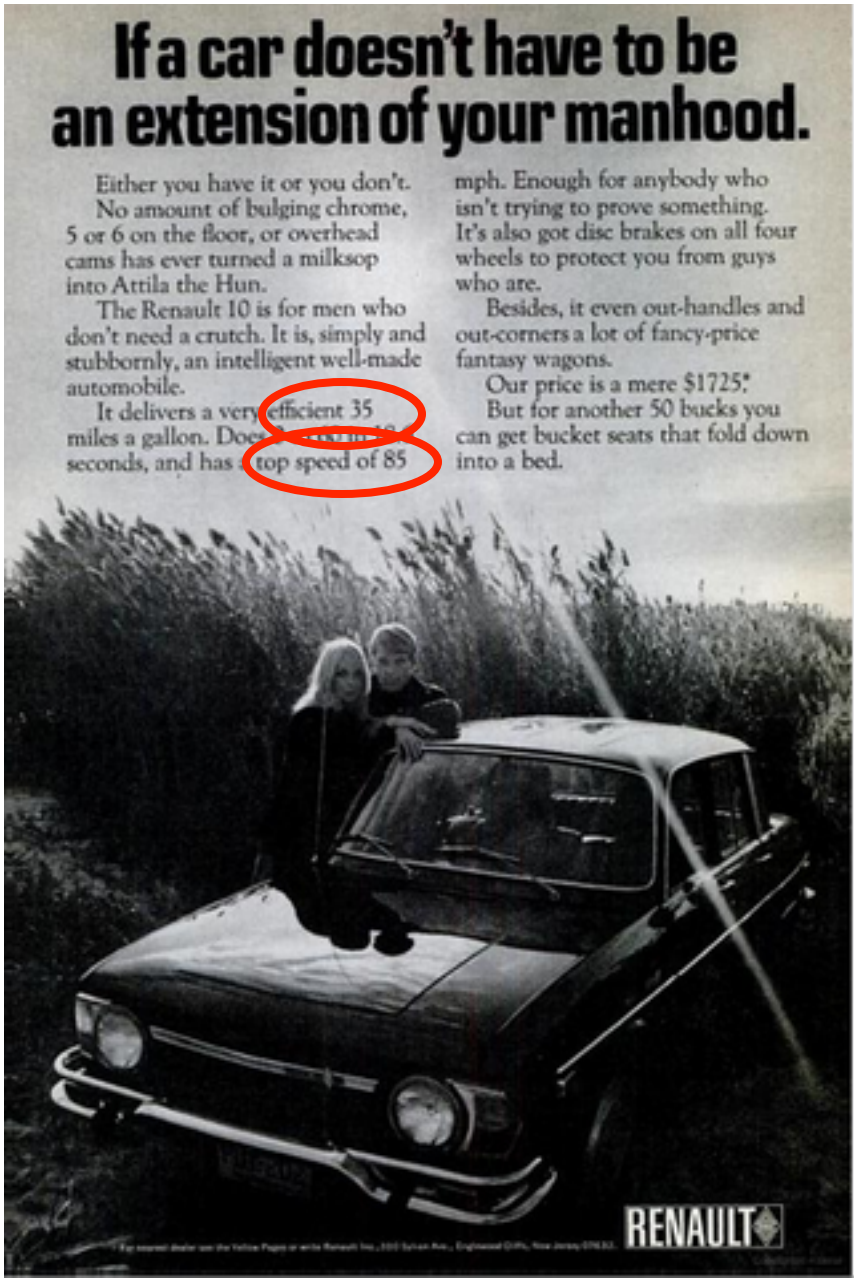

Found in Mom's Basement

What governs fuel usage?

What happens to the fuel burnt in a car engine?

ENGINE Typically ~ 25% efficiency) in Otto, 30% in Diesel

(that is, 25-30% fuel energy → kinetic energy)

So ~ 75-70% loss to heat

What then happens to the kinetic energy?
Must dissipate somehow and eventually also become heat

DISSIPATION

Roughly equal in size

1. **Braking** (kinetic energy must be replaced later on acceleration)
2. **Frictional losses in gears, bearings**
3. **Rolling resistance**
4. **Air resistance** (aerodynamic drag)

Fuel uses in transportation: air resistance

Energy used to push air in front of car – goes into kinetic energy of the air

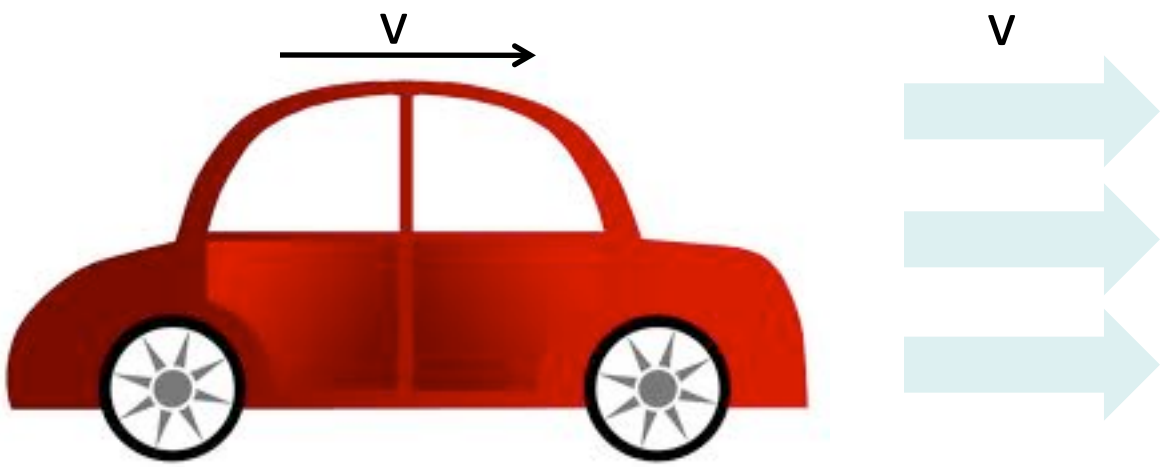

Worst-case scenario: the car pushes all air it intersects up to its speed v. Power to do this is same as energy in flow of air at that speed:

$$P = \tfrac{1}{2} \rho A v^3$$

where A is the cross-sectional area of the car.

Fuel uses in transportation: air resistance

Real life is not the worst-case scenario – car slips through air without having to accelerate it all to v

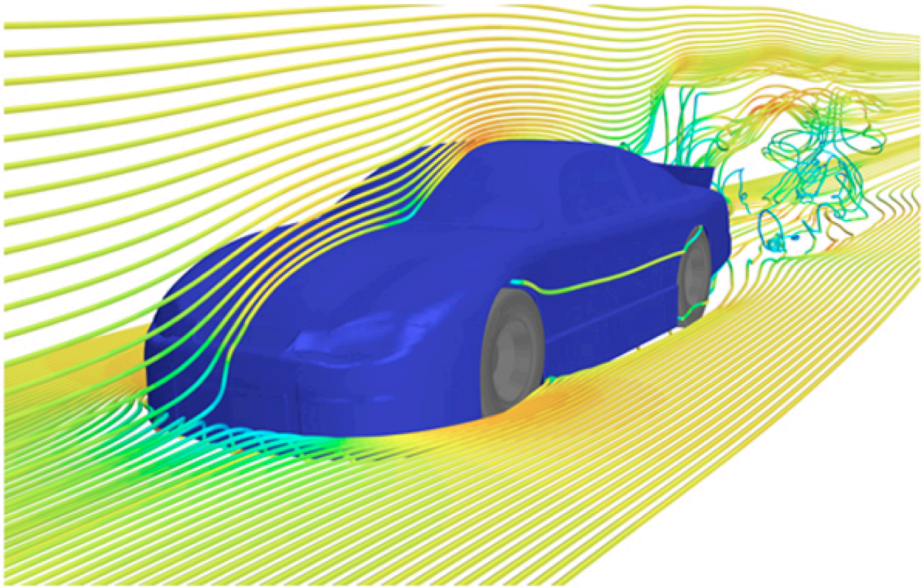

Solution: adjust formula by some fudge factor that describes how "streamlined" the car shape is:

$$P = C_a \, ½ \, \rho \, A \, v^3$$

Sports cars want low C_a because of v^3 depend. Typical C_a: Porsche 0.3, Hummer 0.6.

Fuel uses in transportation: rolling resistance or "rolling friction"

In real deformable tires, friction between tires and road causes force opposing motion of the car.

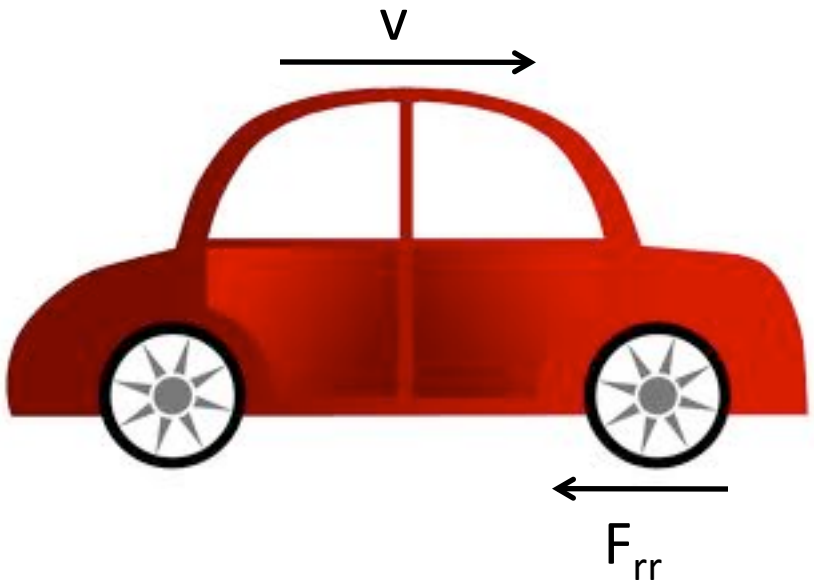

Fuel uses in transportation: rolling resistance or "rolling friction"

In real deformable tires, friction between tires and road causes force opposing motion of the car.

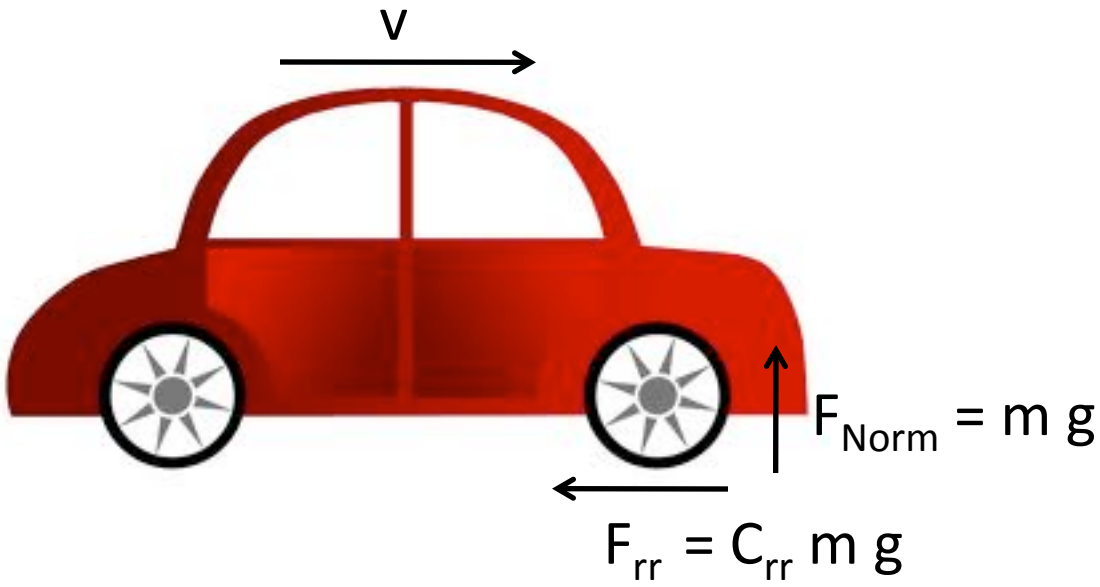

Force of rolling friction is proportional to normal force that opposes car's weight against ground.

(Stick in a constant C_{rr} , the "coefficient of rolling resistance")

Power dissipated is energy/time = force x distance / time :

$$P = C_{rr}\ m\ g\ v$$

Rolling resistance

Value of C_{rr} depends on tire and surface properties – including deformability of tires

Approximate C_{rr} values

Steel wheels on steel rails	.001
Car tires on concrete	.01
Car tires on asphalt	.03
Car tires in sand	> .1

Steel rails are slick – low friction – so low rolling resistance, great for minimizing power losses in long-distance travel.

But problematic for starting up or stopping suddenly, when torque must be high. Need some friction to apply torque to the wheel, or just spins in place.

Trains needs some solution that combines efficient long-distance travel with ability to brake and start.

Sand provides as-needed increases in friction for train tracks

Sand is released through nozzle onto tracks when traction needed

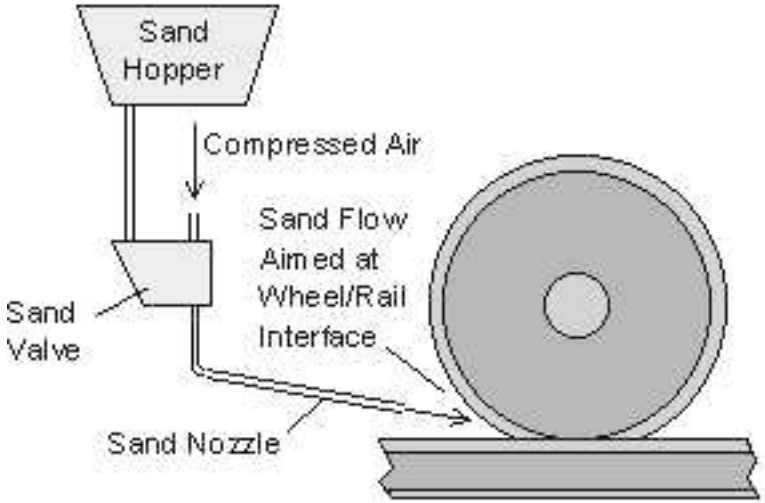

Sanding system
Image: Univ. of Sheffield

Sanding nozzle
Image: HowStuffWorks

Sand temporarily increases friction (and so also C_{rr})