GEOS 24705 / ENST 24705 / ENSC 21100

2018

# Lecture 7

# Birth of the industrial revolution, theory of heat engines

# Evolution of human use of power in Britain

| | Wood | Animal + human | Water + wind | Total |
|---|---|---|---|---|
| Output work | | 55 | 15 | 65 |
| Input power | 680 | (275) | (15) | 970 |

Braudel: pre-modern usage was ~ 70 W work, ~ 1000 W primary power

Steam by 1800 adds another ~ 10 W work (~600 W input)

Steam by 1825 adds about ~40 W work (~1200 W input, doubles)

*In 1800 U.K., steam is less than wind + water, but by 1825 exceeds it*
*growth in efficiency means that work output rises faster than primary power*

# Industrial Revolution isn't tied simply to heat engine evolution

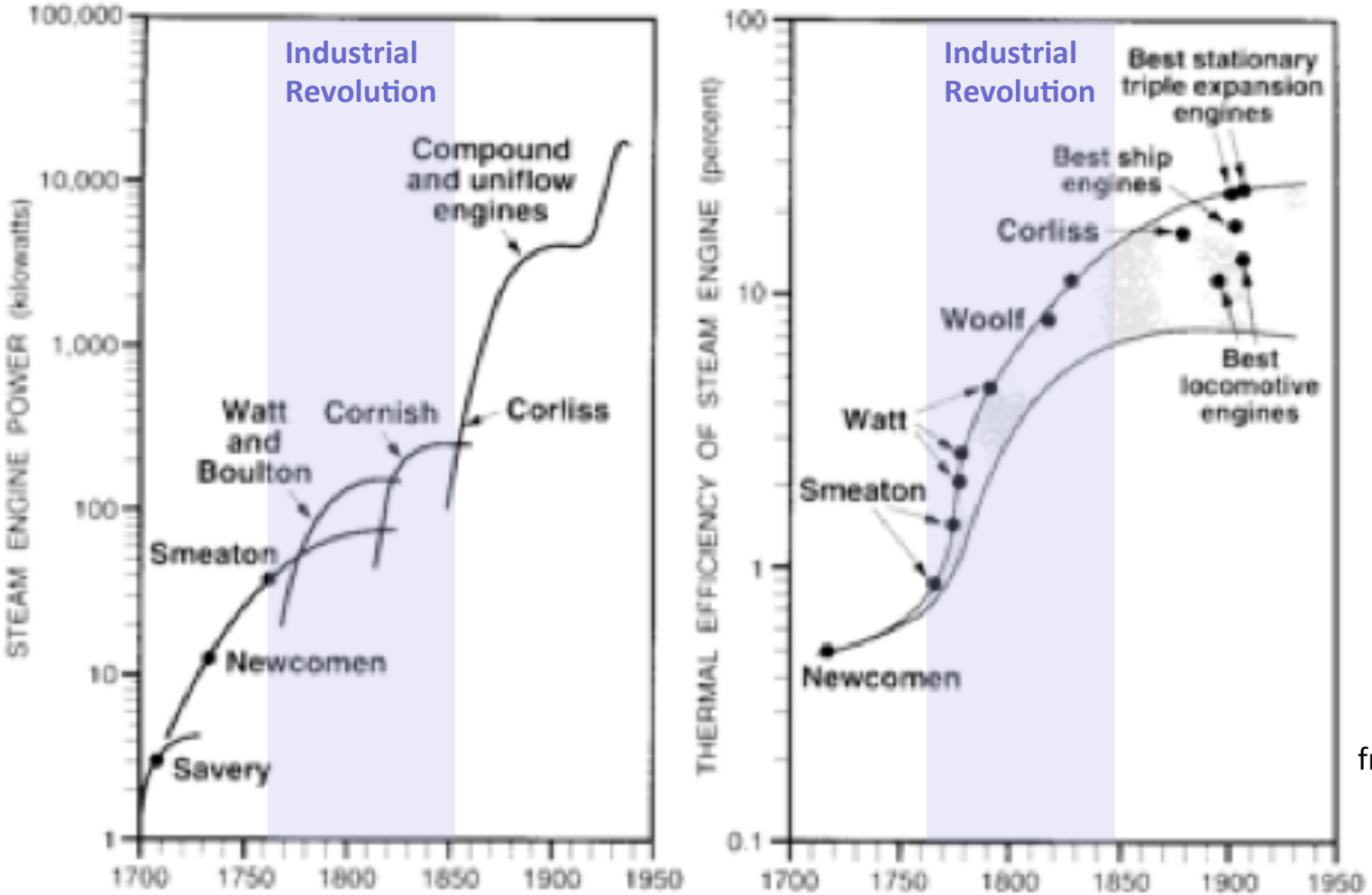


from V. Smil

**FIGURE 5.3** The rising power and improving efficiency of the best steam engines, 1700–1930. *Sources:* Plotted from data in Dickinson (1939) and von Tunzelmann (1978).

*starts when heat engines are negligible in the U.K. other than for mine pumping*

# Estimates of early energy use are broadly consistent

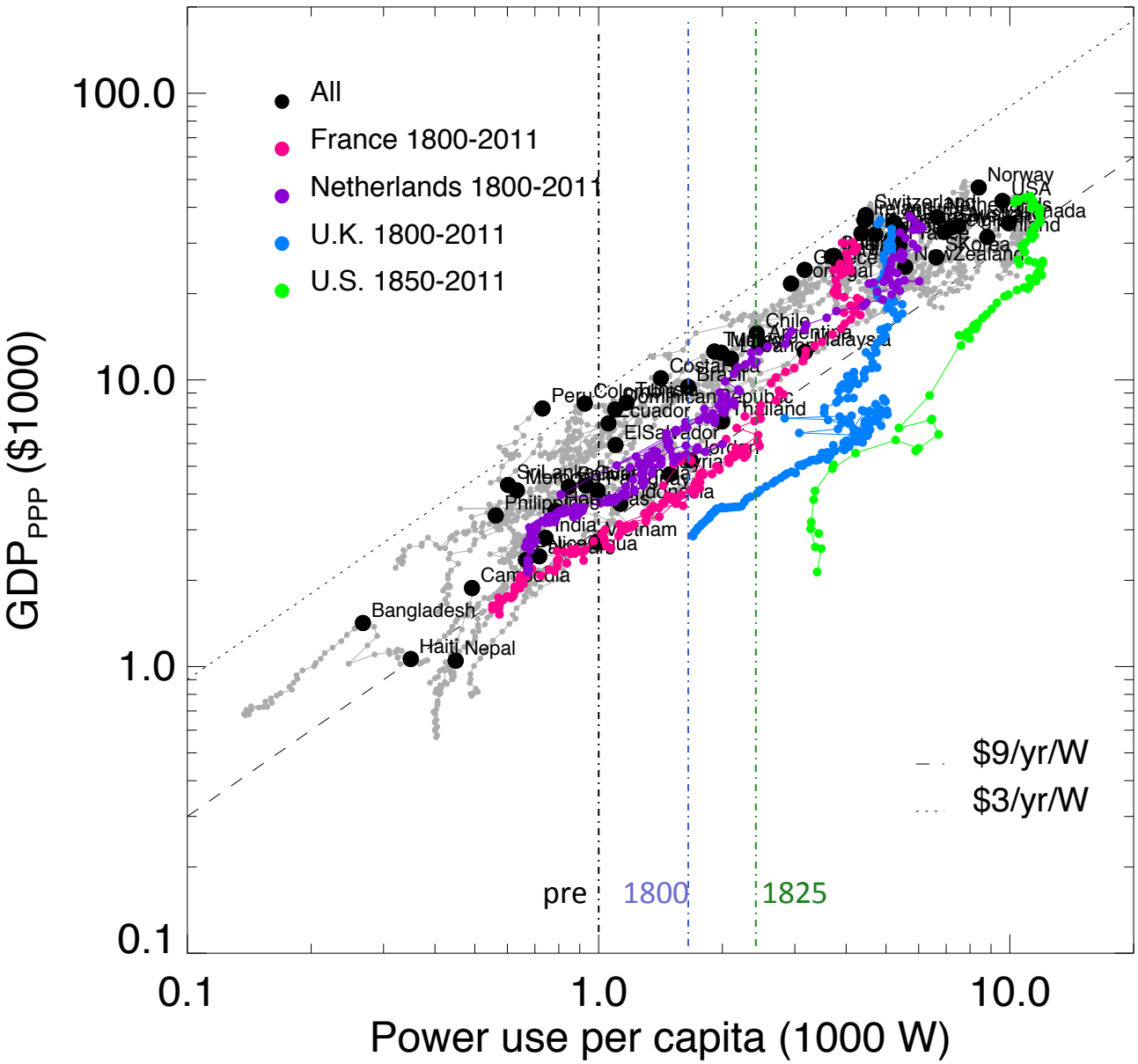


*U.S. note: one data point per 5 years til 1949*

*Data:*
*World Bank,*
*~1960-2011 2005 USD*

*www.energyhistory.org,*
*converted to 2005 USD*

U.S. data from EIA

# Duty mattered – coal was a cost

**1781, Watt licenses technology with payment based on coal savings:**

"...the Coalbrookdale partners decided to supersede the Newcomen engines in the works at Coalbrookdale and at Ketley, by engines on the plans of James Watt. It was found that the Newcomen engine in Coalbrookdale consumed 12 tons of small coal, valued at 2s. 6d. per ton, beyond what would be required for every 10,000 strokes by a Watt engine having a cylinder 66 inches in diameter and 11 feet long, making 9 strokes a minute. It was agreed therefore, in 1781, to pay to Boulton and Watt one-third of the estimated savings in fuel upon this basis, or 10 s. for every 10,000 strokes, as recorded by a mechanical counter, during the unexpired portion of the term of Watt's renewed patent."

Davey, "The Newcomen Engine", *Proc. of the Inst. of Mech. Eng.*, 1903

# Why didn't engineers give "duty" as a dimensionless efficiency?

"duty" = work done per coal used

why not make it energy per energy?

*because they didn't know that work and heat were equivalent*

# Heat engine development: practice leads theory

Newcomen's 1712 engine comes before we can even measure temperature

Fahrenheit's mercury thermometer is developed only 1714, Celsius scale later

No one asserts equivalence of heat and work til 1790s *(Rumford cannon-boring)*

Still arguing over equivalence in the 1820s *(Carnot)*

More assertions of equivalence in the 1840s: *Von Mayer, Joule, Colding*

No exact measure of heat-work equivalence until Joule in 1845

No firm understanding of what heat is til 1850 *(Clausius, also first idea of entropy)*

Thermodynamics we would recognize: "The Theory of Heat" 1871 (Maxwell)

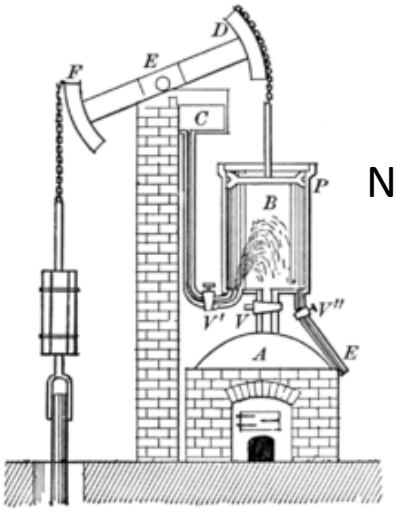


Newcomen, 1712

Joule, 1845

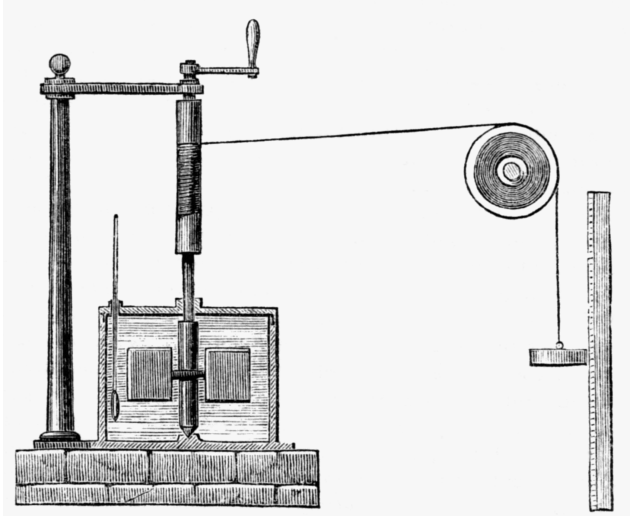

Fig. 4. *Newcomen Engine at Ashton Vale Iron Works, Bristol.*

*From a Sketch made in September, 1895. Erected about 1746-60. Dismounted 1900.*

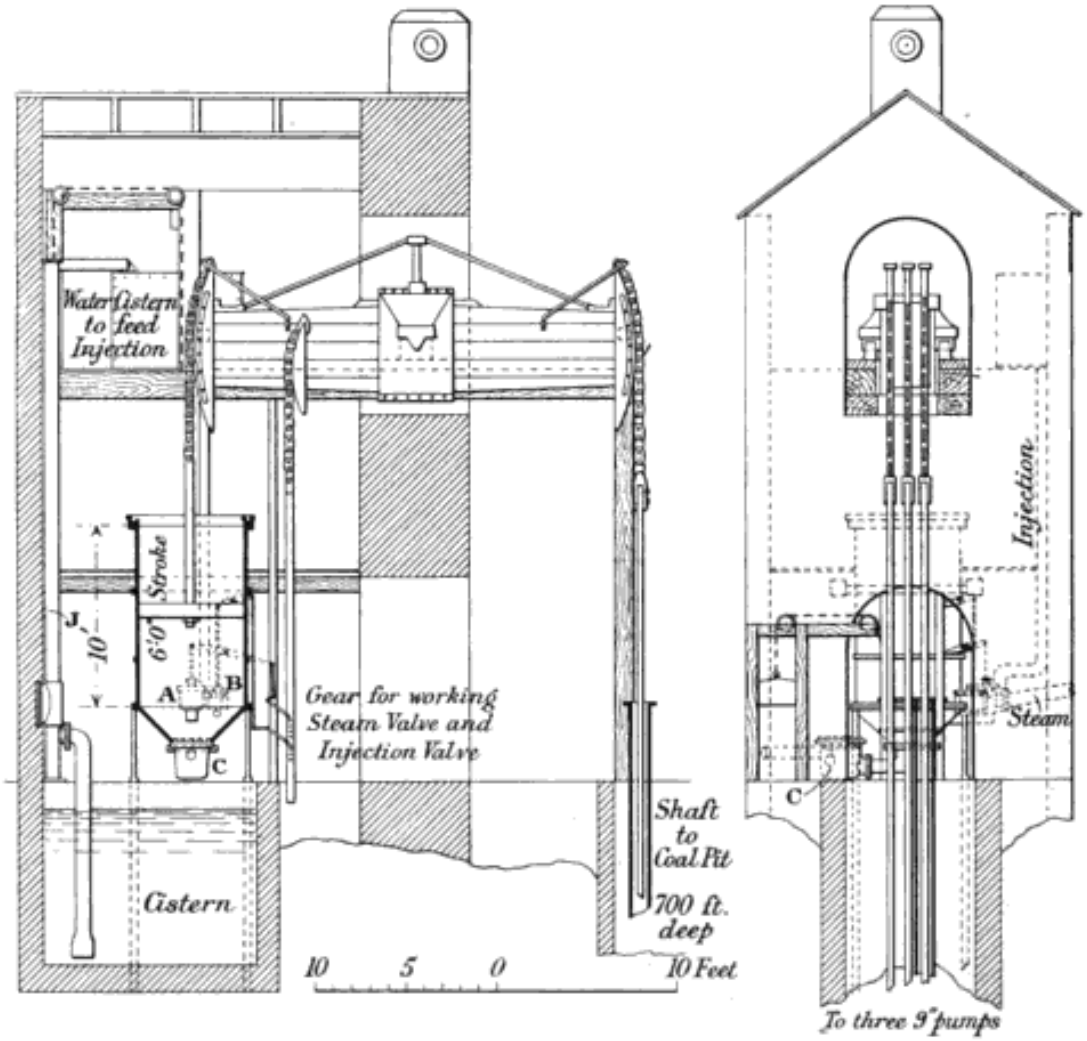


Fig. 5. *Indicator Diagram taken from above Engine, 27th May, 1895.*

Dia. of Cyl. 5' 6"
Stroke 6' 0" about
No. of Strokes per min. 10.

Boiler Pressure 2·3 lbs.
Vacuum Gauge, none fixed.
Time 3 p.m.

Use Newcomen engine to begin to understand heat engine physics

Work = force x distance

*= pressure x volume*

from *Mechanical Engineers,* 1903

# Indicator diagram tells you engine performance: *work done per stroke*

Aston Vale Newcomen engine, built 1746-60, measured 1895

Fig. 5. *Indicator Diagram taken from above Engine, 27th May, 1895.*

Dia. of Cyl. 5' 6"
Stroke 6' 0" about
No. of Strokes per min. 10.

Boiler Pressure 2·3 lbs.
Vacuum Gauge, none fixed.
Time 3 p.m.

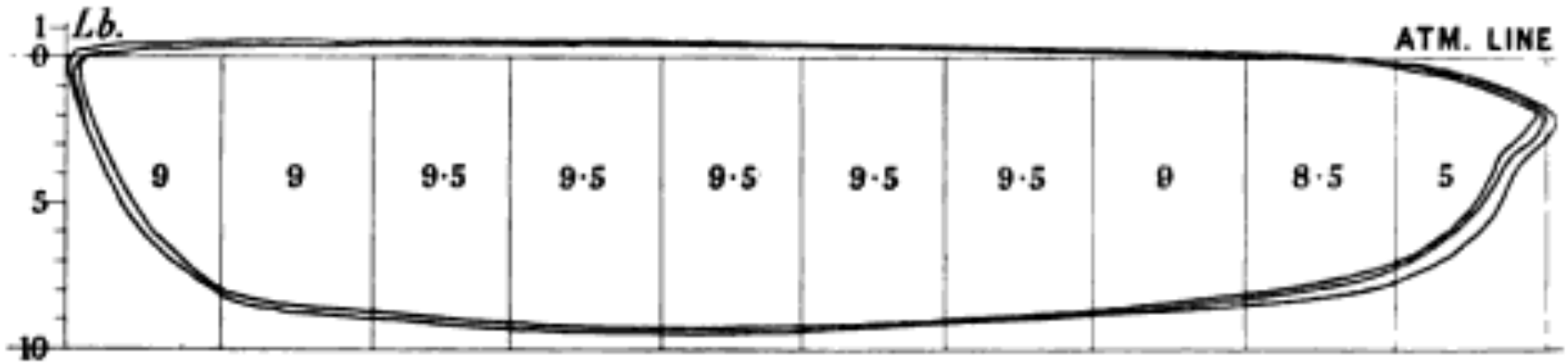


from *Mechanical Engineers,* 1903

Newcomen engine at Farme Colliery, built 1810, measured 1895, still working 1903

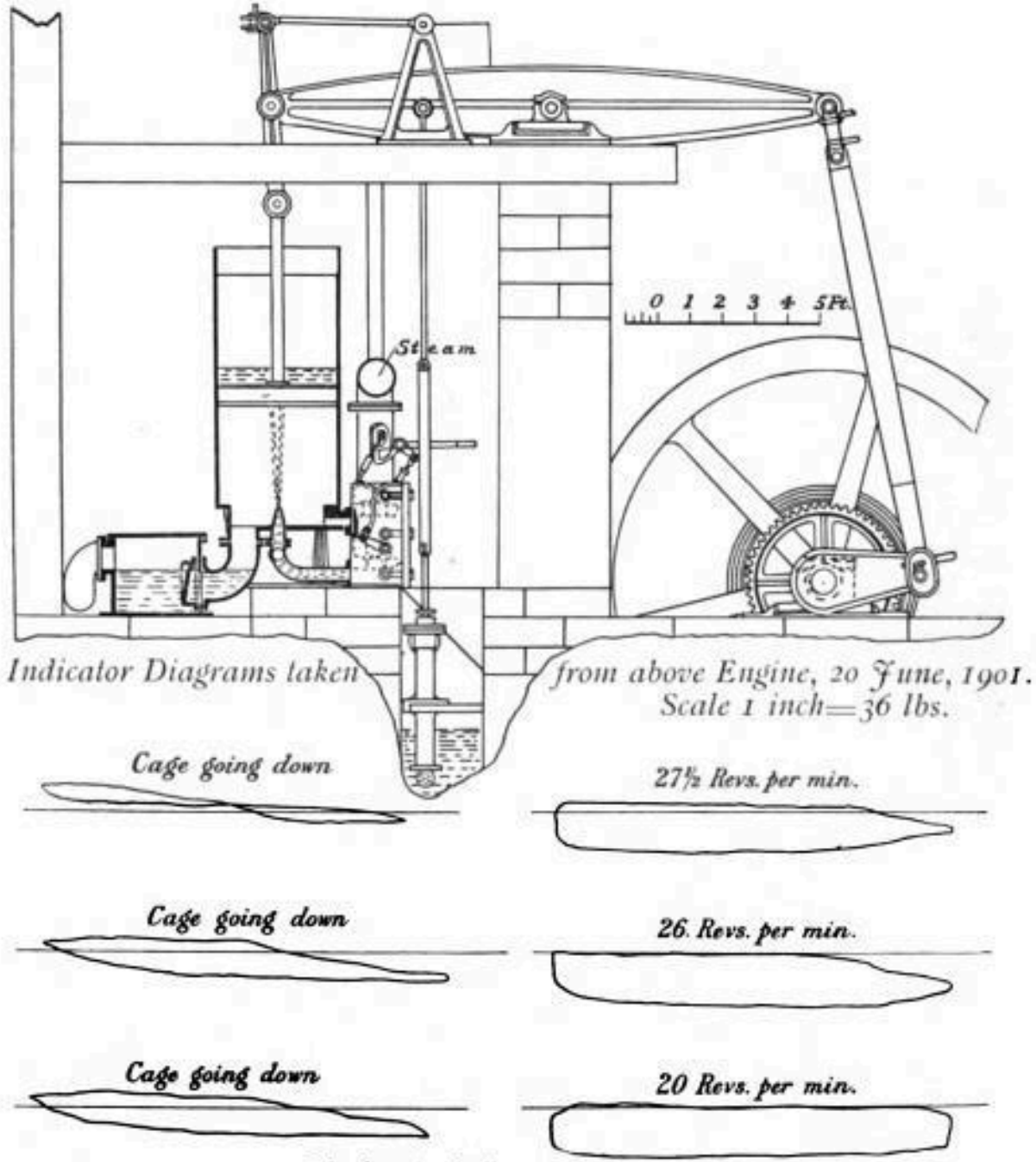

# *Double-action steam engine*

In this animation, instant switch from steam injection to exhaust

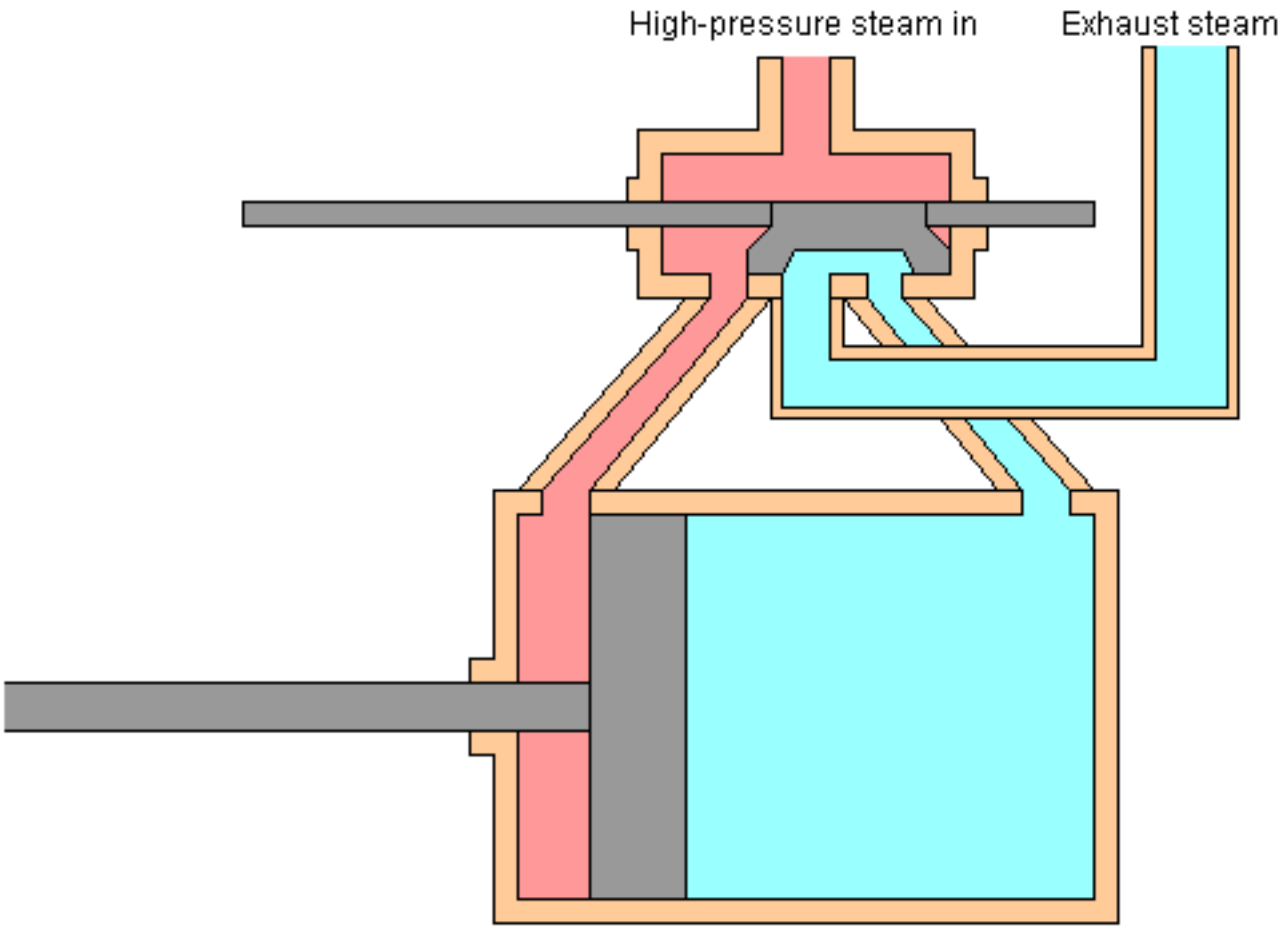

# *Double-action steam engine*

## Real engines cut off steam injection partway through stroke

**1.** Let steam into left side of piston, exhaust from right

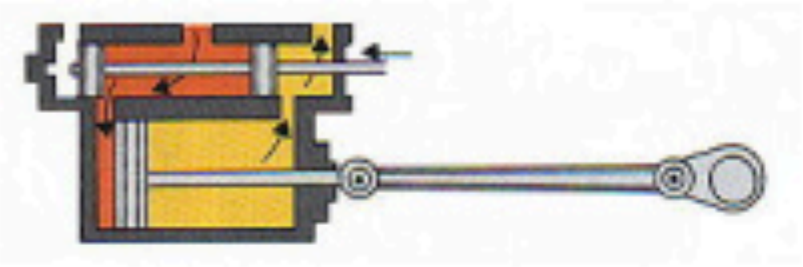

**2.** Piston moves to the right, both valves open

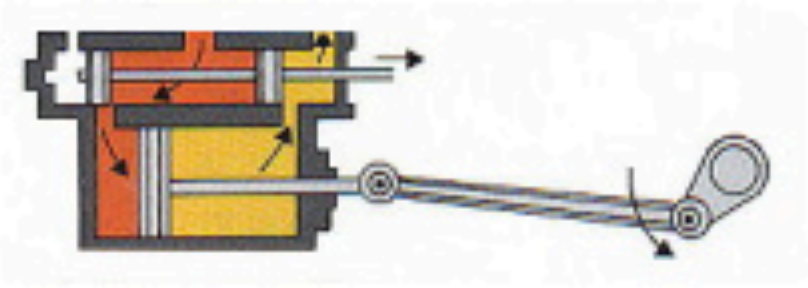

**3.** Left valve closes, piston continues to move right

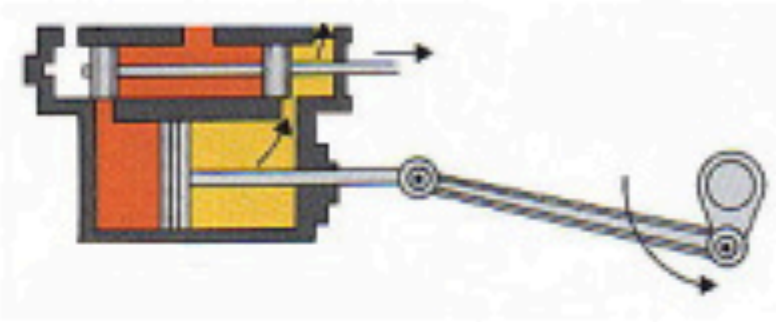

# Cutoff valve reduces power but increases efficiency

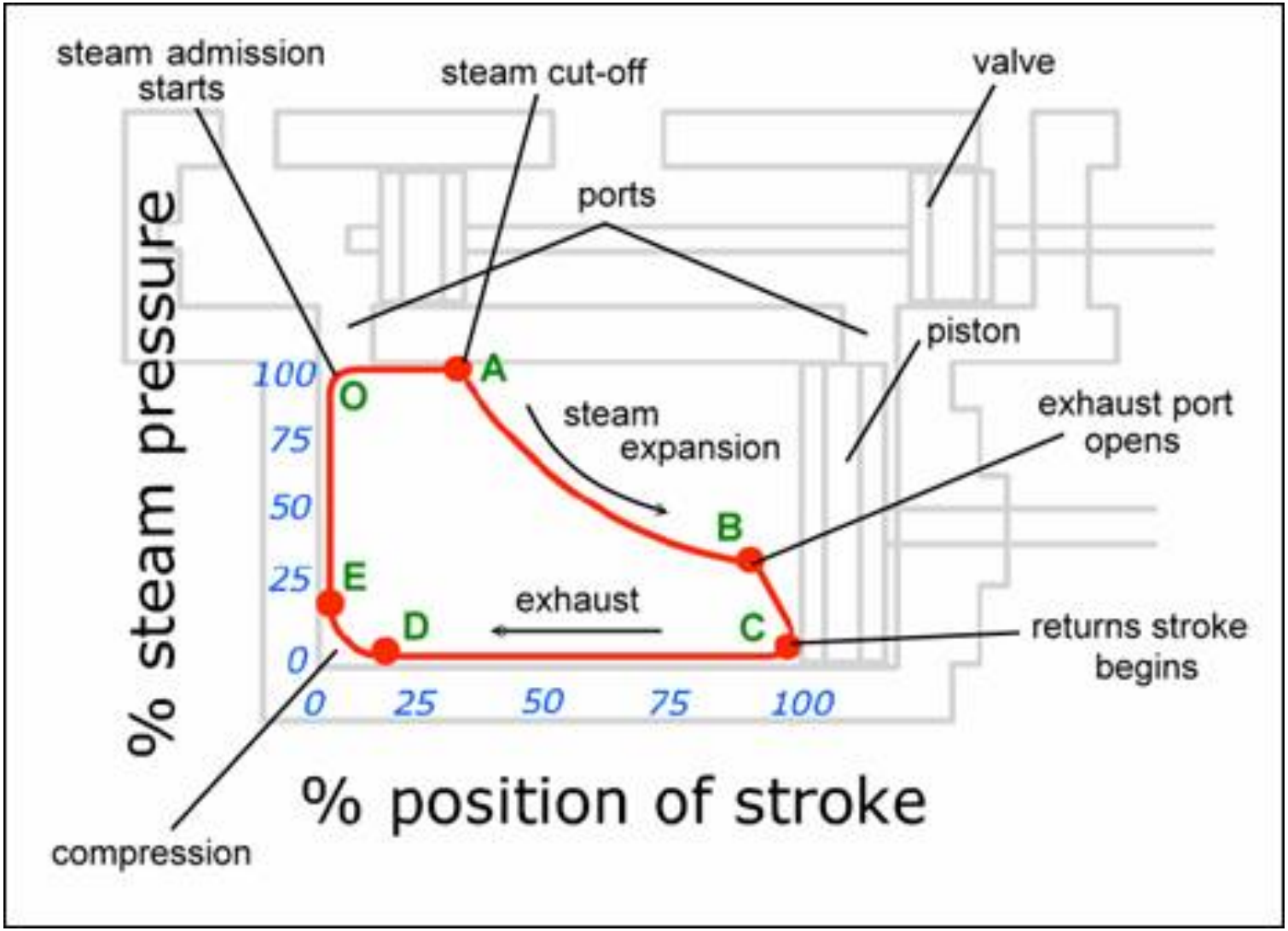

# Simplest possible external combustion engine

## "Stirling engine"

- no condensation, air as the working fluid
- closed cycle – no exhaust

- heat added on one side, other side cold
- displacer moves air from hot to cold side of cylinder

CYCLE

- when air is on hot side, piston moves up
- when air is on cold side, moves down